REVISIONS

LTR	DESCRIPTION		DR	CHK	STRU	MATL	TC	PKG	ENGR	DSGN SUPV	DATA MGT	RELEASE DATE
A	INITIAL RELEASE	CODE C	SEE TITLE BLOCK									

1. SCHEMATIC PAGE NUMBERS ARE AS FOLLOWS:
   - 1 THIS PAGE
   - 2 OVERVIEW PAGE
   - 3–8 SCHEMATICS
   - 9 COMPONENT PINOUTS

NOTES: UNLESS OTHERWISE SPECIFIED

QTY REQD		ITEM NO.	REF DES	CODE IDENT NO.	PART OR IDENTIFYING NO.	NOMENCLATURE OR DESCRIPTION	SPECIFICATION	MATERIAL OR NOTE

PARTS LIST

NEXT ASSEMBLY	USED ON
APPLICATION	

UNLESS OTHERWISE SPECIFIED
DIMENSIONS ARE IN INCHES
TOLERANCES
DECIMALS .XX ±.03 .XXX ±.010 ANGLES ±1/2°
MACHINE FINISH ✓
DO NOT SCALE DRAWING
INTERPRET DWG PER MIL–STD–100

MATERIAL:

CONTRACT NO. _____
APPD _____ DATE _____

DR	E. SIGMAN	11/15/00
CHK	E. SIGMAN	11/15/00
STRU		
MATL		
TC		
PKG		
ENGR	E. SIGMAN	11/15/00
DSGN SUPV		

JET PROPULSION LABORATORY
CALIFORNIA INSTITUE OF TECHNOLOGY
PASADENA, CALIFORNIA
RELEASED THROUGH SECT. 356 DSN

IF SWITCH 6X24 BOARD

SIZE	CODE IDENT NO.		REV
B	23835	IFS6X24	A
SCALE NONE	UNCLASSIFIED	SHEET 1 OF 9	

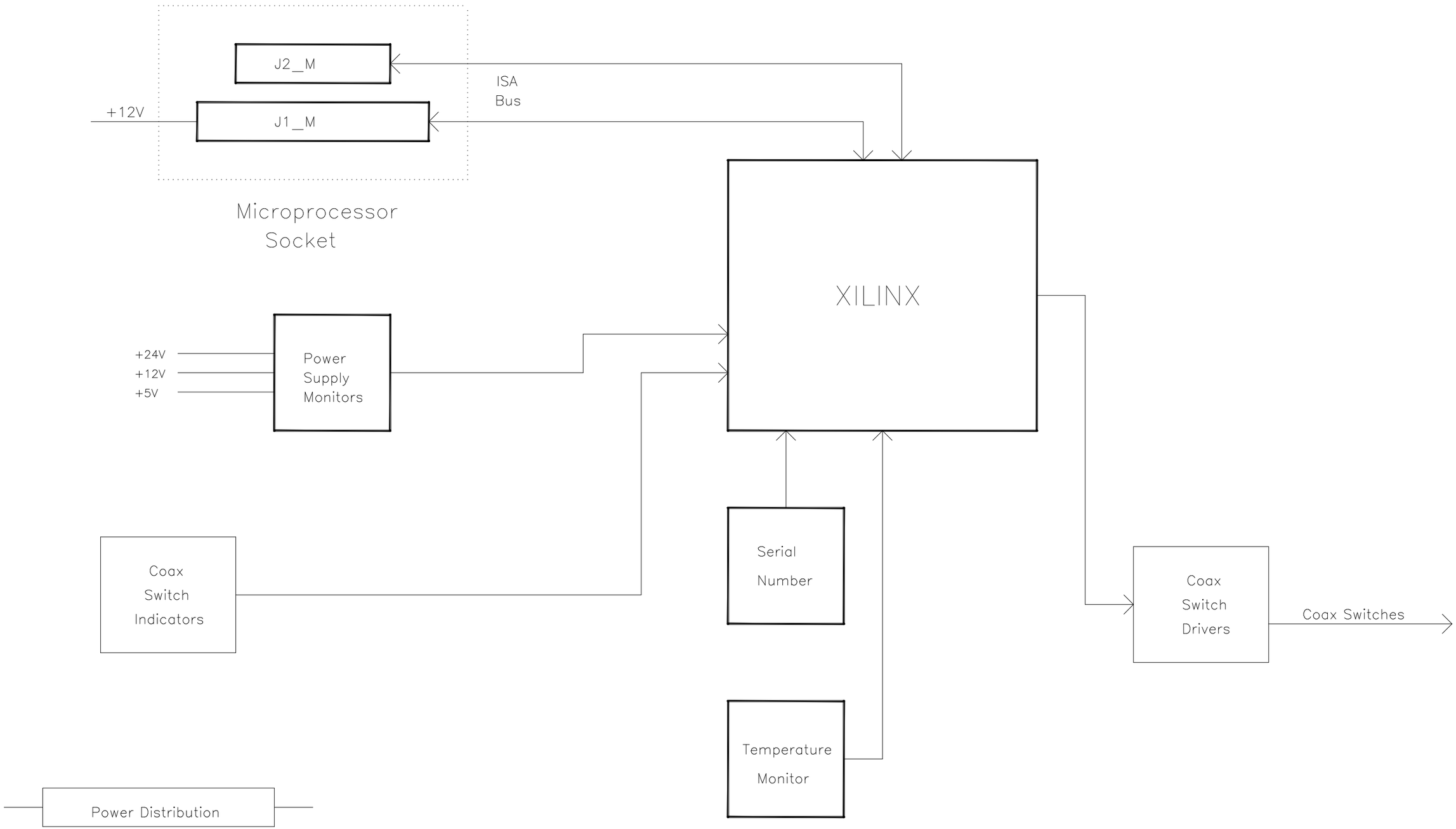

IF Switch Board – Wiring Overview

SIZE	FSCM NO		REV
B	23835	IFS6X24	A
SCALE 1 / 1	UNCLASSIFIED	SHEET 2 OF 9	

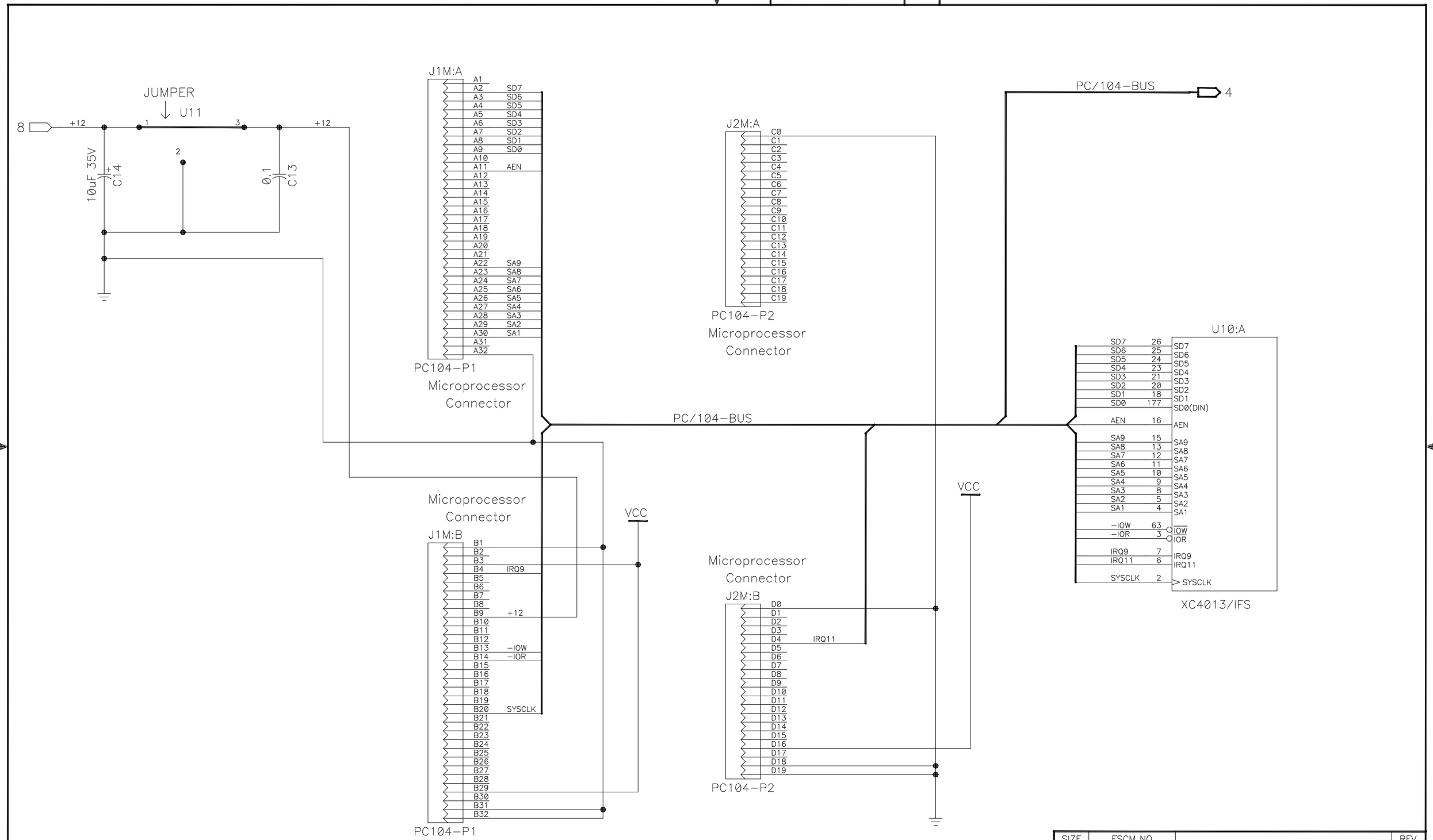

IF Switch Board – ISA Bus Wiring

SIZE	FSCM NO		REV
B	23835	IFS6X24	A
SCALE 1 / 1	UNCLASSIFIED	SHEET 3 OF 9	

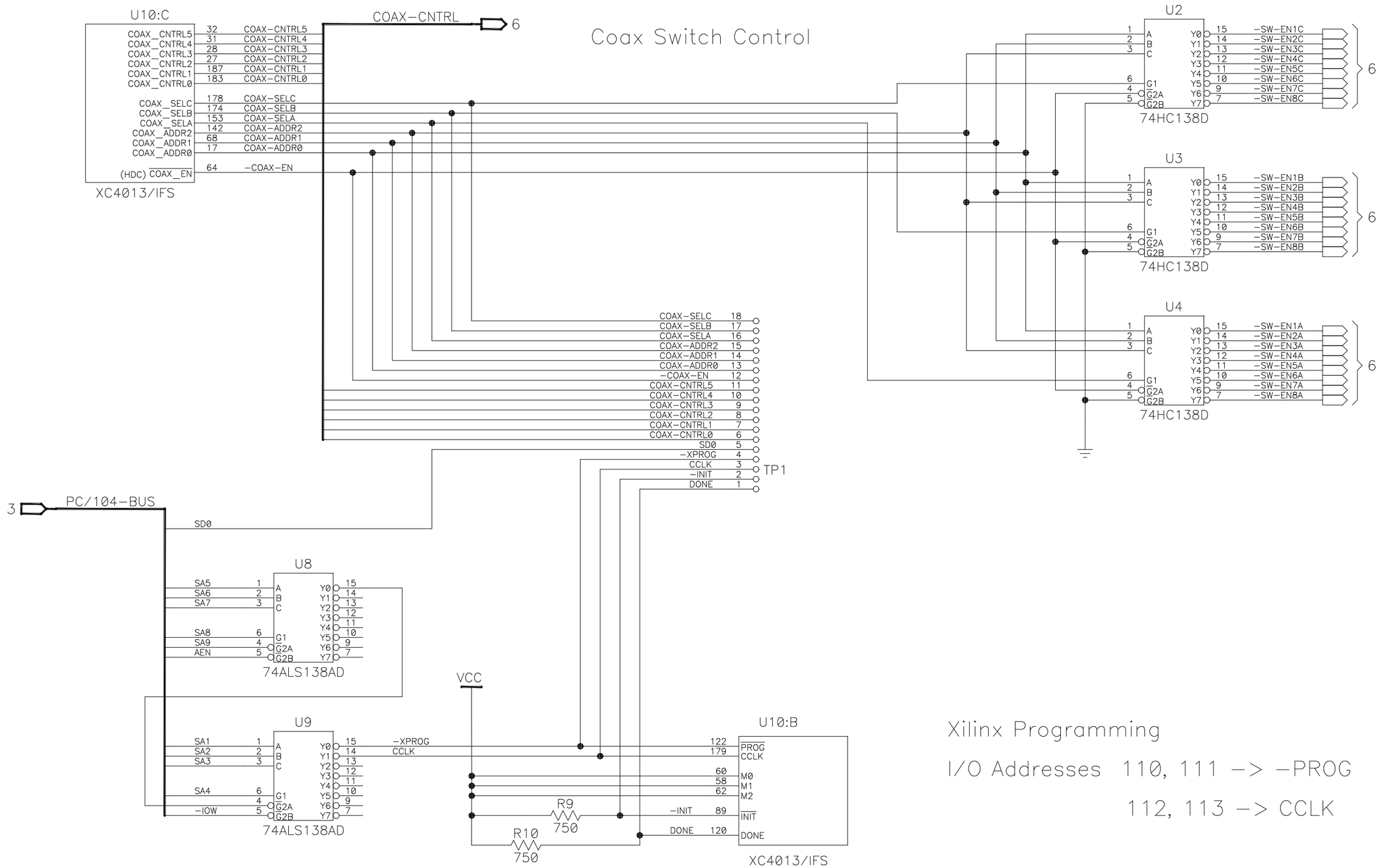

Xilinx Programming

I/O Addresses 110, 111 -> -PROG

112, 113 -> CCLK

SIZE	FSCM NO		REV
B	23835	IFS6X24	A
SCALE 1 / 1	UNCLASSIFIED	SHEET 4 OF 9	

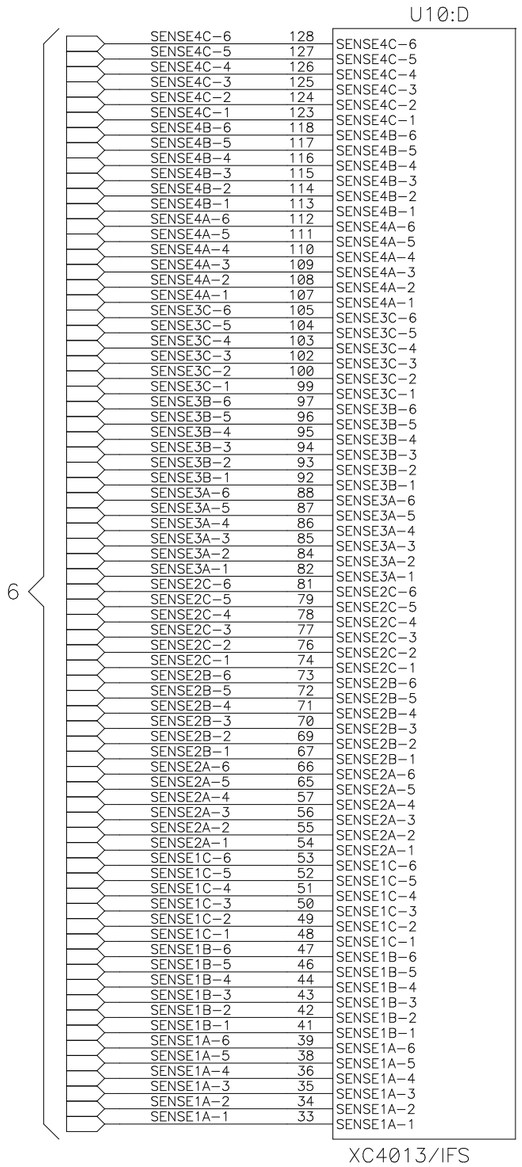

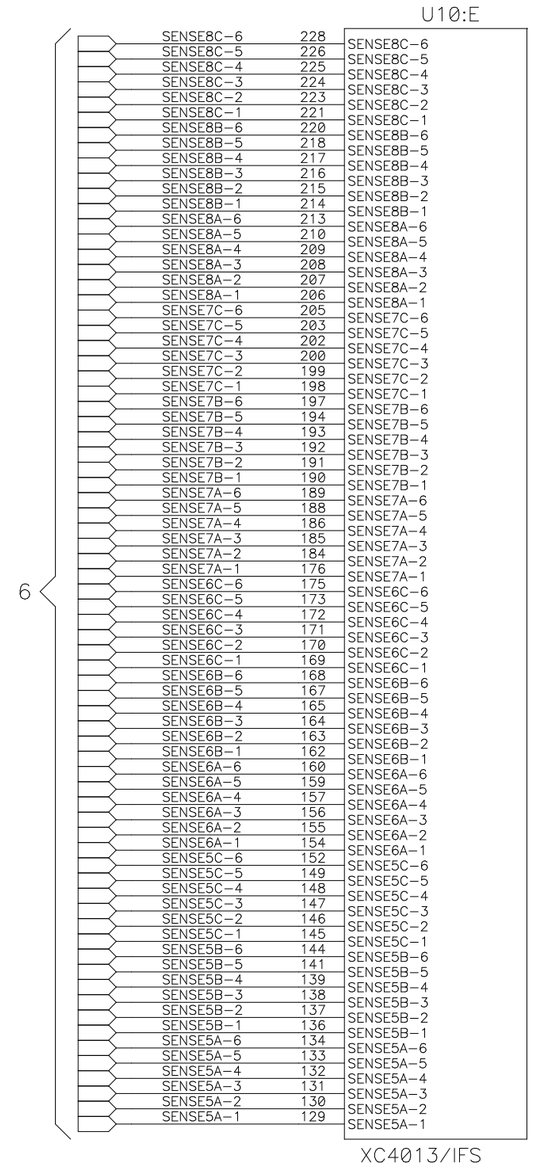

Coax Switch Position Sensing

SIZE	FSCM NO		REV
B	23835	IFS6X24	A
SCALE 1 / 1	UNCLASSIFIED	SHEET 5 OF 9	

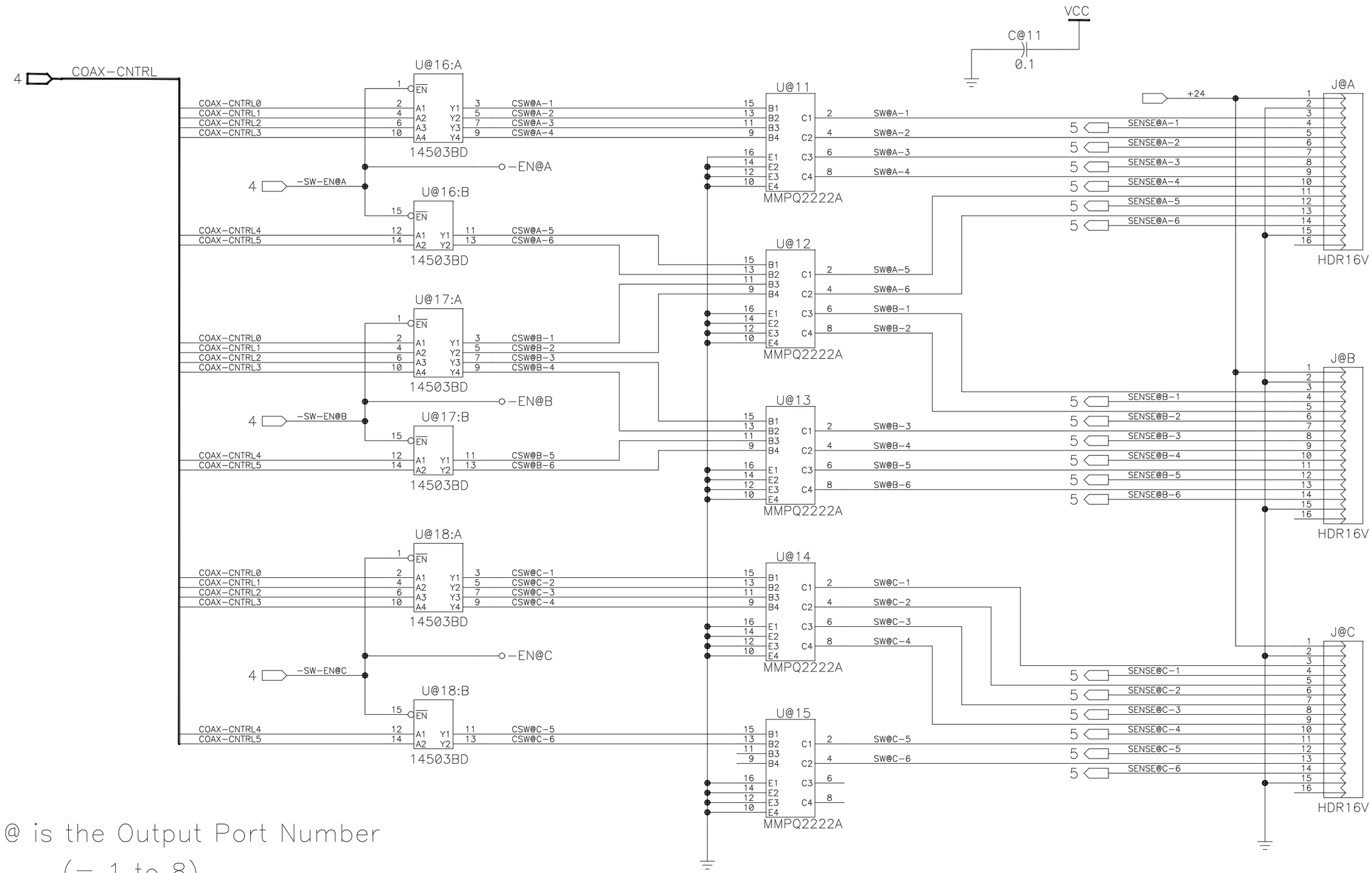

@ is the Output Port Number
(= 1 to 8)

Coax Switch Control & Position Sensing

SIZE	FSCM NO		REV
B	23835	IFS6X24	A
SCALE 1 / 1	UNCLASSIFIED	SHEET 6 OF 9	

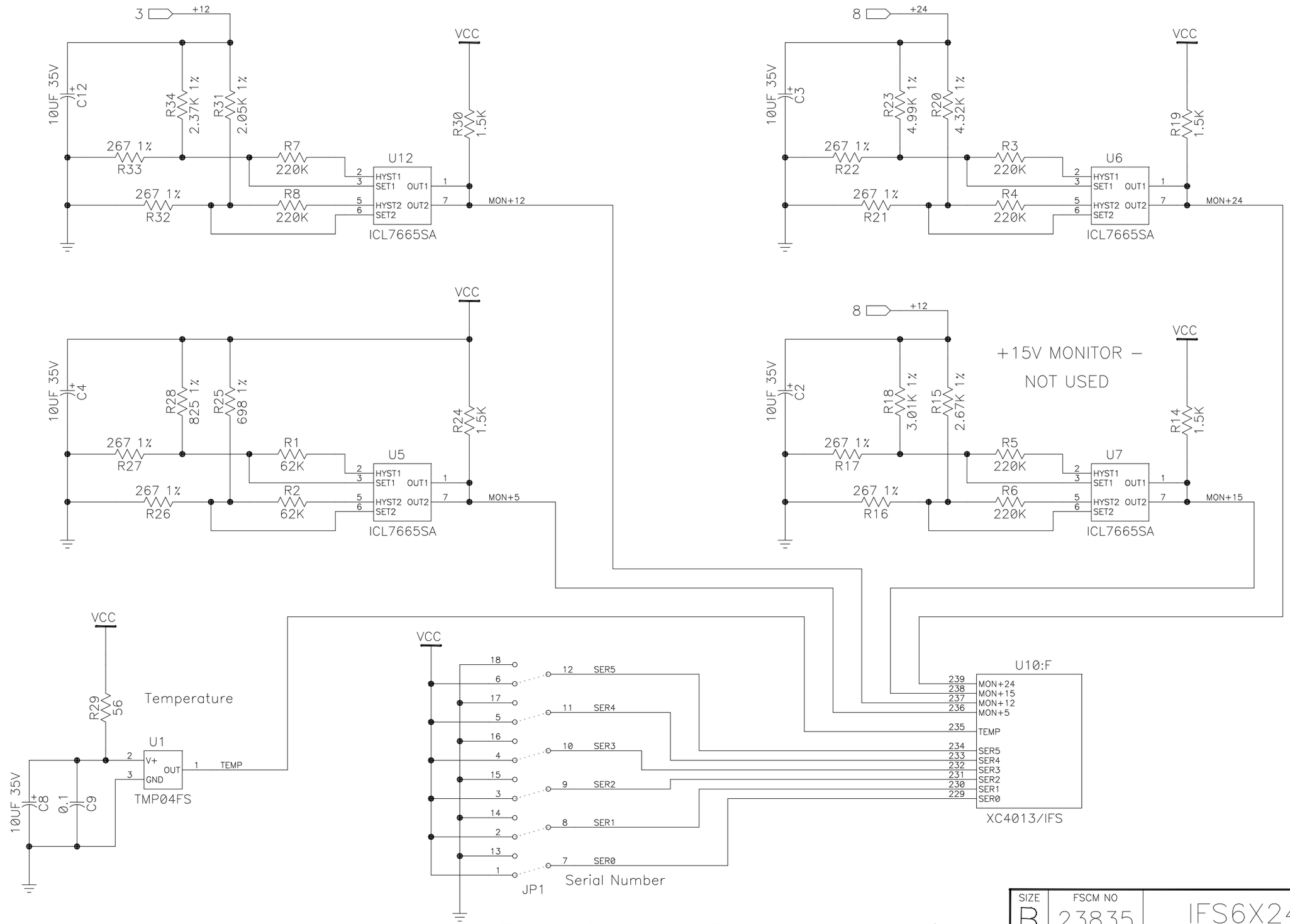

Power Supply & Temperature Monitors

SIZE	FSCM NO		REV
B	23835	IFS6X24	A
SCALE 1 / 1	UNCLASSIFIED	SHEET 7 OF 9	

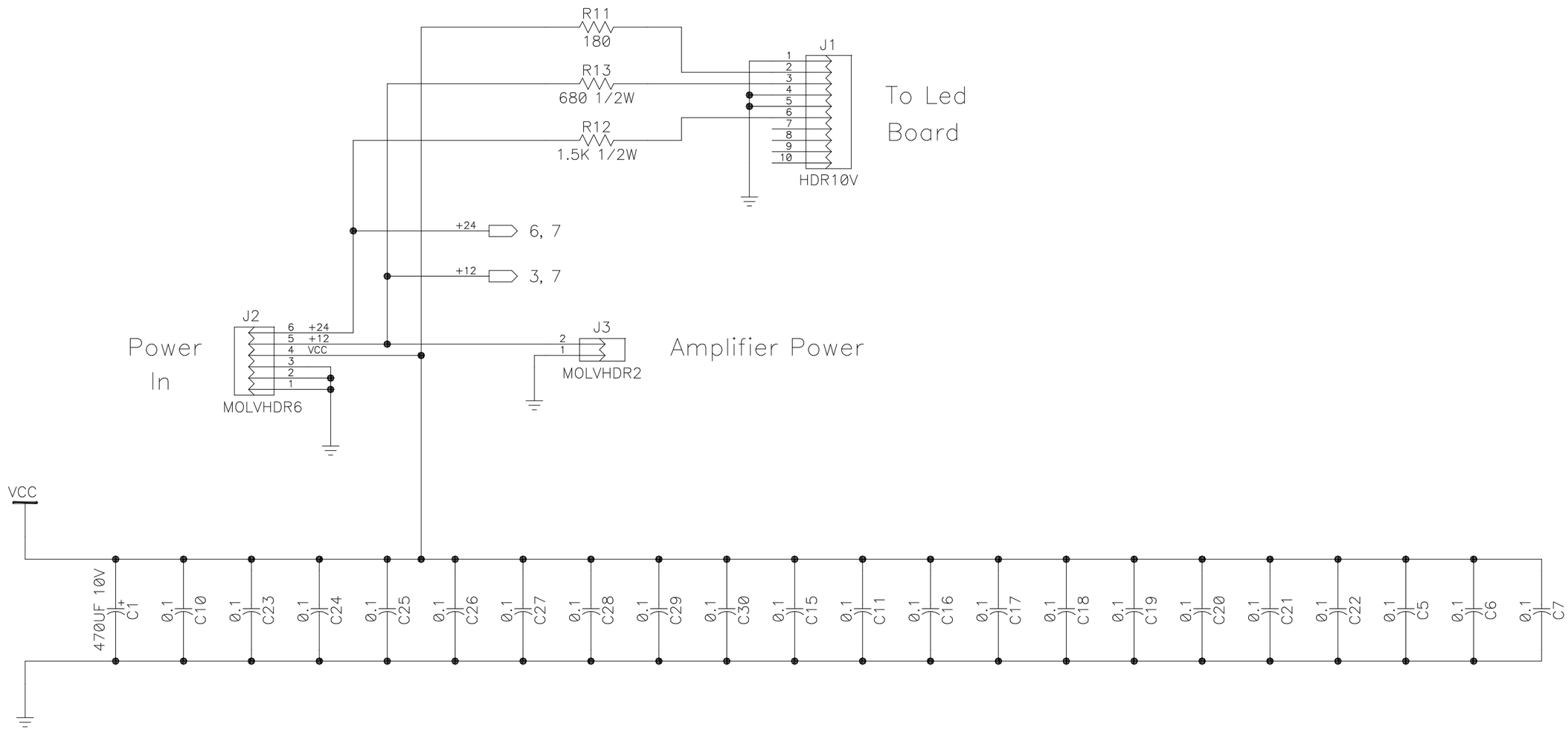

Power

SIZE	FSCM NO		REV
B	23835	IFS6X24	A
SCALE 1 / 1	UNCLASSIFIED	SHEET 8 OF 9	

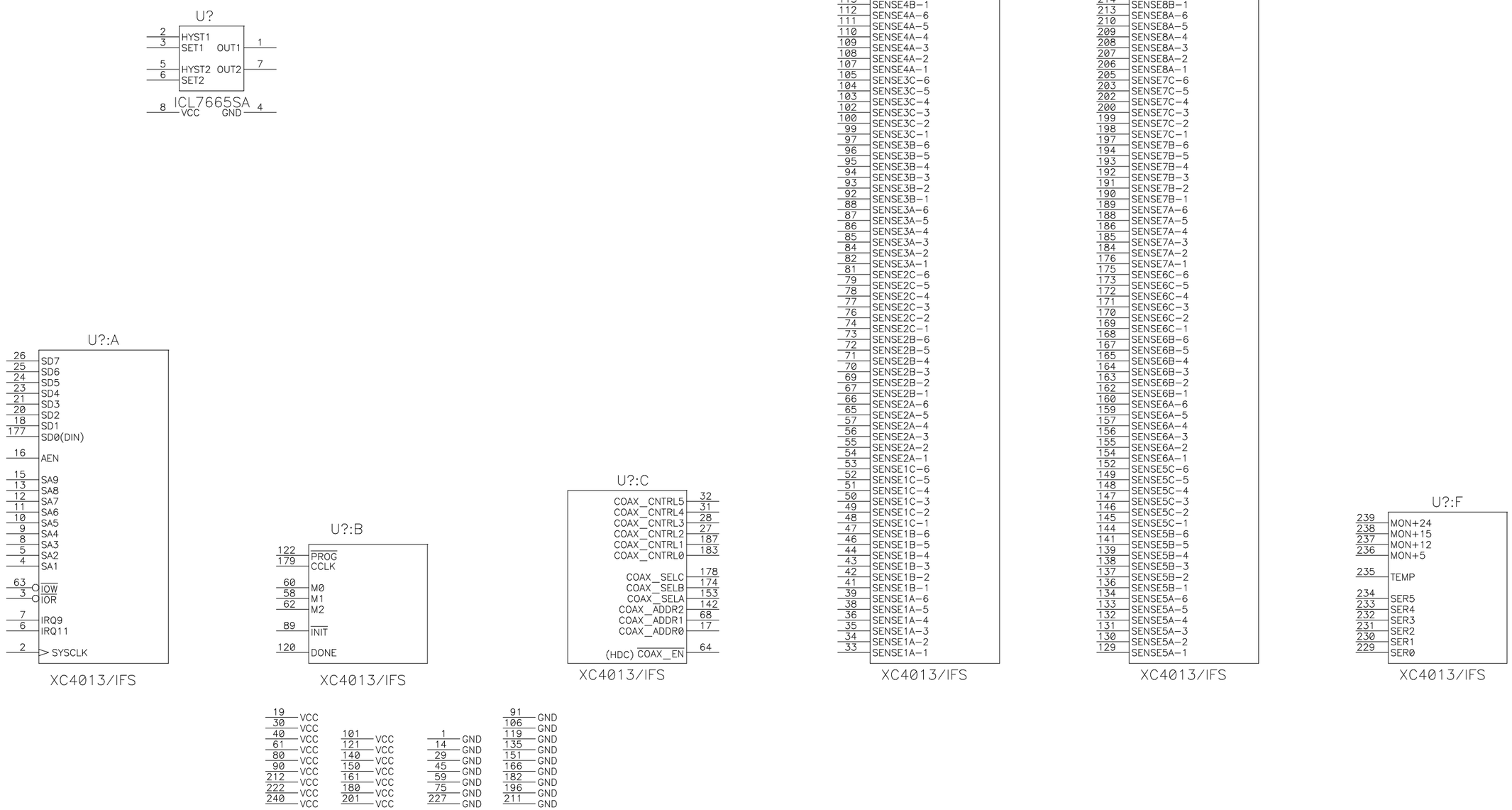

IF Switch Board – Components

SIZE	FSCM NO		REV
B	23835	IFS6X24	A
SCALE 1 / 1	UNCLASSIFIED	SHEET 9 OF 9	