Manuel, I need to get the partnumber for the tunnel diode. See if you can find it

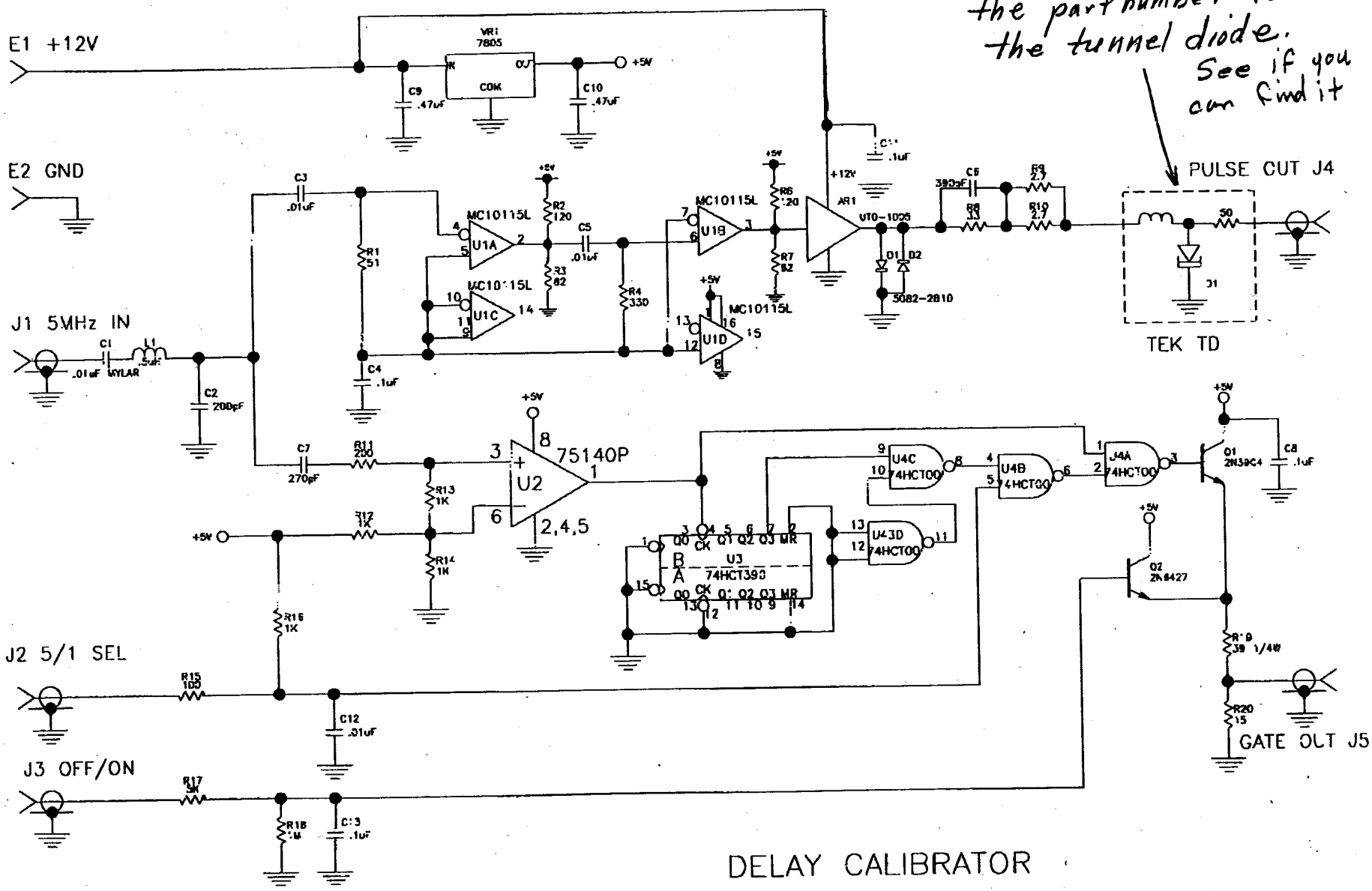

DELAY CALIBRATOR