THE INFORMATION DISCLOSED HEREIN IS PROPRIETARY TO FERRETEC AND IS NOT TO BE REPRODUCED, USED OR DISCLOSED TO OTHERS FOR MANUFACTURING OR FOR ANY OTHER PURPOSE EXCEPT BY SPECIFIC WRITTEN AUTHORIZATION OF THE COMPANY

REVISIONS			
REV	DESCRIPTION	DATE	APPVD
1	PRELIMINARY RELEASE	6/89	CS
2	REVISED PER ECN #0221	6/89	DJT
3	REVISED PER ECN #0333	6/89	DJT
4	REVISED PER ECN #0335	8/89	SC
5	REVISED PER ECN #0651	3/90	SC
6	REVISED PER ECN #0675		

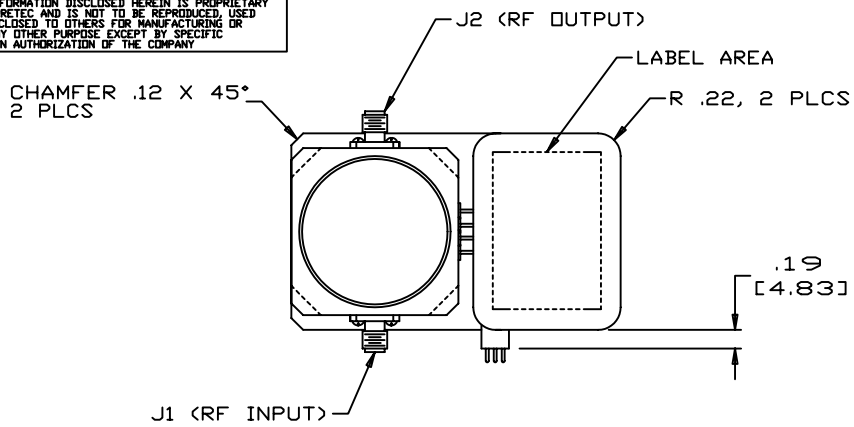

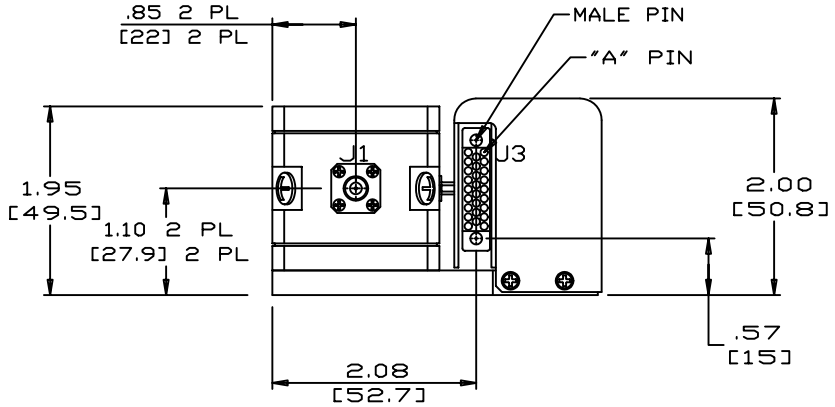

CONN	TYPE	PIN NO.	FUNCTION
J1	SMA-F	THD	RF INPUT
J2	SMA-F	THD	RF OUTPUT
J3	26 PIN	A	LATCH
		B	BIT 11
		C	BIT 12 (LSB)
		D	N/C
		E	BIT 9
		F	BIT 10
		H	N/C
		J	BIT 7
		K	BIT 8
		L	+15V
		M	BIT 5
		N	BIT 6
		P	GND
		R	BIT 3
		S	BIT 4
		T	-15V
		U	BIT 1 (MSB)
		V	BIT 2
		W	N/C
		X	N/C
		Y	+5V
		Z	N/C
		a	N/C
		b	N/C
		c	+28V
J3	26 PIN	d	-28V RTN

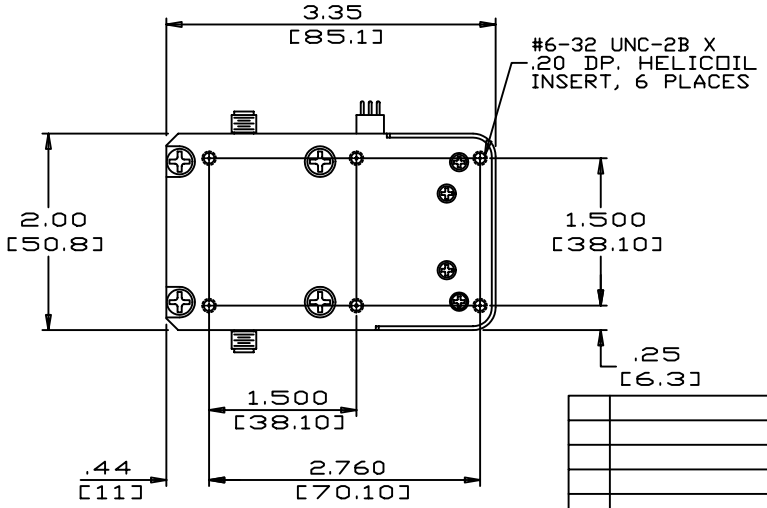

NOTES:

1. FINISH: EXPOSED ALUMINUM, CHROMATE CONVERSION PER MIL-C-5541 CLASS 1A, GOLD. HI-PERM "49", NO FINISH. STAINLESS STEEL, PASSIVATE PER QQ-P-35B.
2. CONNECTORS J1 AND J2 ARE SMA-F TYPE PER MIL-C-39012.
3. CONNECTOR J3: 26 PIN POSITRONIC, SMPL26M0T0LB OR EQUIVALENT.

TOLERANCE	
.XX	±.03 [.76]
.XXX	±.005 [.127]

INCHES [MILLIMETERS]

ITEM NO.	QTY	PART NO.	DESCRIPTION	SPECIFICATION

LIST OF MATERIAL OR PARTS LIST

ALL THREADS UNIFIED SERIES, EXTERNAL THREADS TO BE CLASS 2A, INTERNAL THREADS TO BE CLASS 2B, AFTER FINISH, UNLESS OTHERWISE SPECIFIED.

63 FINISH ON ALL MACHINED SURFACES UNLESS OTHERWISE SPECIFIED.

REMOVE ALL BURRS AND SHARP EDGES UNLESS OTHERWISE SPECIFIED.

DO NOT SCALE DWG.

DIMENSIONS ARE IN INCHES AND INCLUDE FINISH THICKNESS UNLESS OTHERWISE SPECIFIED

TOL. UNLESS SPEC.

FINISH: 1

CONTRACT NO.

DRAWN	DJT 6/89
CHECKED	CS 6/89
PROJ ENGR	CS 6/89
PROG MGR	CS 6/89
MFG ENGR	
QA ENGR	
RELIABILITY	
CUSTOMER	

NEXT ASSY	USED ON

ferretec
FERRETEC INC.
47697 WESTINGHOUSE DR.
FREMONT CA. 94539

TITLE
OUTLINE, 1.7 FLTR/DGTL DRIVER 4STG

SIZE	FSCM NO.	DRAWING NO.	REV.
C	65402	0200074	6

SCALE 1/1

SHEET 1 OF 1