User's Guide

HP 70000 Series Modular Spectrum Analyzer System

HP 70900B Local Oscillator Source-Controlled Modules

HEWLETT PACKARD

HP Part No. 70900-90286
Printed in USA March 1994

Edition A.0.0

Notice

The information contained in this document is subject to change without notice.

Hewlett-Packard makes no warranty of any kind with regard to this material, including, but not limited to, the implied warranties of merchantability and fitness for a particular purpose. Hewlett-Packard shall not be liable for errors contained herein or for incidental or consequential damages in connection with the furnishing, performance, or use of this material.

Restricted Rights Legend.

Use, duplication, or disclosure by the U.S. Government is subject to restrictions as set forth in subparagraph (c) (1) (ii) of the Rights in Technical Data and Computer Software clause at DFARS 252.227-7013 for DOD agencies, and subparagraphs (c) (1) and (c) (2) of the Commercial Computer Software Restricted Rights clause at FAR 52.227-19 for other agencies.

©Copyright Hewlett-Packard Company 1990, 1991, 1992, 1994
All Rights Reserved. Reproduction, adaptation, or translation without prior written permission is prohibited, except as allowed under the copyright laws.
1400 Fountaingrove Parkway, Santa Rosa, CA 95403-1799, USA

Certification

Hewlett-Packard Company certifies that this product met its published specifications at the time of shipment from the factory. Hewlett-Packard further certifies that its calibration measurements are traceable to the United States National Institute of Standards and Technology, to the extent allowed by the Institute's calibration facility, and to the calibration facilities of other International Standards Organization members.

Warranty

This Hewlett-Packard instrument product is warranted against defects in material and workmanship for a period of one year from date of shipment. During the warranty period, Hewlett-Packard Company will, at its option, either repair or replace products which prove to be defective.

For warranty service or repair, this product must be returned to a service facility designated by Hewlett-Packard. Buyer shall prepay shipping charges to Hewlett-Packard and Hewlett-Packard shall pay shipping charges to return the product to Buyer. However, Buyer shall pay all shipping charges, duties, and taxes for products returned to Hewlett-Packard from another country.

Hewlett-Packard warrants that its software and firmware designated by Hewlett-Packard for use with an instrument will execute its programming instructions when properly installed on that instrument. Hewlett-Packard does not warrant that the operation of the instrument, or software, or firmware will be uninterrupted or error-free.

Limitation of Warranty

The foregoing warranty shall not apply to defects resulting from improper or inadequate maintenance by Buyer, Buyer-supplied software or interfacing, unauthorized modification or misuse, operation outside of the environmental specifications for the product, or improper site preparation or maintenance.

NO OTHER WARRANTY IS EXPRESSED OR IMPLIED. HEWLETT-PACKARD SPECIFICALLY DISCLAIMS THE IMPLIED WARRANTIES OF MERCHANTABILITY AND FITNESS FOR A PARTICULAR PURPOSE.

Exclusive Remedies

THE REMEDIES PROVIDED HEREIN ARE BUYER'S SOLE AND EXCLUSIVE REMEDIES. HEWLETT-PACKARD SHALL NOT BE LIABLE FOR ANY DIRECT, INDIRECT, SPECIAL, INCIDENTAL, OR CONSEQUENTIAL DAMAGES, WHETHER BASED ON CONTRACT, TORT, OR ANY OTHER LEGAL THEORY.

Assistance

Product maintenance agreements and other customer assistance agreements are available for Hewlett-Packard products.

For any assistance, contact your nearest Hewlett-Packard Sales and Service Office.

Safety Symbols

The following safety symbols are used throughout this manual. Familiarize yourself with each of the symbols and its meaning before operating this instrument.

CAUTION	The *CAUTION* sign denotes a hazard. It calls attention to a procedure which, if not correctly performed or adhered to, could result in damage to or destruction of the product or the user's work. Do not proceed beyond a *CAUTION* sign until the indicated conditions are fully understood and met.
WARNING	**The *WARNING* sign denotes a hazard. It calls attention to a procedure which, if not correctly performed or adhered to, could result in injury to the user. Do not proceed beyond a *WARNING* sign until the indicated conditions are fully understood and met.**
DANGER	**The *DANGER* sign denotes an imminent hazard to people. It warns the reader of a procedure which, if not correctly performed or adhered to, could result in injury or loss of life. Do not proceed beyond a *DANGER* sign until the indicated conditions are fully understood and met.**

General Safety Considerations

WARNING

- **Before this instrument is switched on, make sure it has been properly grounded through the protective conductor of the ac power cable to a socket outlet provided with protective earth contact.**

  Any interruption of the protective (grounding) conductor, inside or outside the instrument, or disconnection of the protective earth terminal can result in personal injury.

- **There are many points in the instrument which can, if contacted, cause personal injury. Be extremely careful.**

  Any adjustments or service procedures that require operation of the instrument with protective covers removed should be performed only by trained service personnel.

CAUTION

Before this instrument is switched on, make sure its primary power circuitry has been adapted to the voltage of the ac power source.

Failure to set the ac power input to the correct voltage could cause damage to the instrument when the ac power cable is plugged in.

In This Book

This manual explains how to operate HP 70000 Series modular spectrum analyzer systems and lightwave signal analyzers.

- Spectrum analyzer and lightwave signal analyzer features and operating details are provided in the following chapters.

  Chapter 1 describes the basic operation of a spectrum analyzer and lightwave signal analyzer. The chapter also provides details for an analyzer that is being operated for the first time.

  Chapter 2 illustrates the organization of the softkeys that are accessed by pressing the MENU softkey.

  Chapter 3 provides a set of quick reference tables that list all softkeys by functional group. The softkeys are listed alphabetically within each functional group.

  Chapter 4 provides detailed descriptions of each softkey. The softkey descriptions are organized alphabetically.

- Troubleshooting information is provided in the following chapters.

  Chapter 5 provides modular system troubleshooting procedures.

  Chapter 6 provides descriptions for displayed system error messages.

- Refer to the appendixes and glossary for the following information:
  - Appendix A describes spectrum analyzer and lightwave-signal-analyzer theory of operation. The appendix also provides individual block diagrams for HP 70000 Series modular spectrum analyzer system modules.
  - Appendix B describes inputs and outputs on individual HP 70000 Series modular spectrum analyzer system modules. A brief description of each module is also provided.
  - Appendix C describes how to care for fiber-optic connectors and cables that are used with lightwave signal analyzers.
  - Appendix D provides reference tables for ASCII characters, control codes, and escape sequences.
  - Glossary defines spectrum analyzer, lightwave-signal-analyzer, and modular-measurement system terminology.

Contents

1. Overview

Notation Conventions Used in this Manual 1-1
Front-Panel Controls 1-2
  Analyzer Functions 1-2
  Active Function and Data Entry 1-2
  Front-Panel Controls 1-3
Accessing Analyzer Functions with the Instrument Keypad 1-5
Accessing Analyzer Functions with the (MENU) Key 1-6
Preparing the Analyzer for Measurements 1-7
Electrical Cable Connections 1-10
Fiber-Optic Cable Connections 1-10
  Cleaning Optical Connectors 1-10
Making a Measurement 1-11
  Instrument Preset 1-11
  Measurement Procedure 1-11
  Use Coupled Functions to Maintain Accuracy Easily 1-12
  Resolving Closely Spaced Signals 1-13
  Viewing Low-Level Signals 1-13
Interpreting Measurement Results 1-14
  Common Measurement Indicators 1-14
  Lightwave Signal Analyzer Measurement Indicators 1-17
  Auxiliary Measurement Indicators 1-19
Interpreting Front-Panel Indicators 1-21
Using the (USER) Key 1-23
  Presetting the User Softkeys 1-23
  Creating a Custom Menu of User Softkeys 1-23
  Incorporating User-Defined Functions into the User-Softkey Menu 1-25
  Restricting Instrument Operation to User Softkeys 1-25
Using the (DISPLAY) Key 1-26
Accessing Custom, User-Defined Functions 1-28
Accessing the Memory Card 1-29
  Formatting a Memory Card 1-30

2. Softkey Menu Maps

`Freq` Softkey Menu 2-2
`Amptd` Softkey Menu 2-3
`Marker` Softkey Menu 2-4
`BW,Swp` Softkey Menu 2-5
`Traces` Softkey Menu 2-6
`State` Softkey Menu 2-7
`Misc` Softkey Menu 2-12

3. SoftKey Quick Reference
Functional Grouping Definitions 3-22

4. Softkey Descriptions
1/T 4-1
3-DIMEN On Off 4-1
66 MODE On Off 4-2
A<-A+B 4-2
A-B->A On Off 4-3
A-B+DL On Off 4-3
A-C ->A On Off 4-4
ACTIVE MARKER 4-4
ALC ALT 4-5
ALC EXT 4-5
ALC NRM 4-6
alc/track 4-6
A◀A*DL/(A+B) 4-7
A◀A*DL/(A+B+C) 4-7
A◀A*DL/B) 4-8
A◀A*DL/C) 4-8
A◀A–B 4-9
A◀A–B+DL 4-9
A◀(A–B)–C 4-10
A◀(A–B)–C+DL 4-10
A◀A–C 4-11
A◀A–C+DL 4-11
A◀DL*(A+B)/C) 4-12
A METER On Off 4-12
AM FREQ 4-13
AM INT EXT 4-13
AM % On Off 4-14
AMPCOR -> LOWER 4-14
AMPCOR On Off 4-15
AMPCOR -> UPPER 4-15
AMP REF OFFSET 4-16
AMPTD VALUE 4-17
ANALYZR TEST 4-17
ANOTATN On Off 4-18
ANY CHR 4-18
ATTEN AutoMan 4-19
A UNITS AutoMan 4-20

AUTZERO On Off 4-20
AVERAGE SHRT->C 4-21
A XCH B 4-22
A XCH C 4-23
B<-B-DL 4-23
BEEPER On Off 4-24
bias 4-24
BIAS ADJUST 4-25
BIAS On Off 4-25
BIAS PK MAX 4-25
BIAS PK MIN 4-26
BIAS PK RES 4-26
BIAS PK START 4-27
BLANKNG On Off 4-27
BLANK TRACES 4-28
BLOB On Off 4-28
BNKSTRT On Off 4-28
B XCH C 4-29
CAL ALL 4-30
cal enable 4-30
CAL GAIN 4-31
CAL LOGAMP 4-31
cal menu 4-31
CAL RES BW 4-32
CAL SRC INT EXT 4-32
cal src values 4-33
CAL VID BW 4-33
CANCEL 4-33
catalog & MSI 4-34
C<-B 4-36
CENTER 4-36
CENTER DELTA 4-36
-> CF 4-37
-> CF STEP 4-37
CF STEP AutoMan 4-38
CHANGE PREFIX 4-38
CLEAR TO END 4-39
CLEAR WRT A 4-39
CLEAR WRT B 4-40
CLEAR WRT C 4-40

C ◀ DAC SEARCH 4-41
CLOSE PIT 4-41
CLOSEST PEAK 4-42
COMMAND 4-42
CONFIG 4-44
CONFIRM DELETE 4-45
CONFIRM ERASE 4-45
CONFIRM RESTART 4-45
CONT 4-46
CONT SWEEP 4-46
CONV LOSS 4-47
COUPLNG AC DC 4-47
CPL AVG On Off 4-48
CPL DET On Off 4-48
dBm 4-49
dBμV 4-49
dBmV 4-50
debug 4-50
DEBUG FAST 4-50
DEBUG On Off 4-51
DEBUG SLOW 4-52
DEFINE USR KEY 4-52
DELETE ALL 4-53
DELETE CHAR 4-53
DELETE or... 4-54
DELETE SEGMENT 4-54
DELTA 4-55
detectr 4-55
DETECTR AutoMan 4-56
DETECTR GND AUT 4-56
DET SEL LOG V 4-57
DISPOSE USER 4-57
DSP LIN On Off 4-58
EDIT FUNCDEF 4-58
edit limit 4-59
ENTER COMMAND 4-59
enter limit 4-60
ENTER LINE 4-60
ERASE ALL 4-61
erase/restart 4-61

execute DLP 4-62
EXT 4-62
EXTEND STATE 4-63
EXT IF On Off 4-64
ext mixer 4-64
EXT VID FM IQ 4-65
FLATCAL On Off 4-65
FORMAT 4-66
FREQ 4-66
FREQ FOR CAL 4-67
FREQ OFFSET 4-67
FREQ VALUE 4-68
FRQ LIM On Off 4-68
fulband KAQUVE 4-69
fulband WFDGYJ 4-69
FULL SPAN 4-70
GAINCAL On Off 4-70
grat control 4-71
GRAT On Off 4-71
GRATSCR On Off 4-71
GROUND 4-72
HIGHEST PEAK 4-72
HOLD 4-73
HORZ OFFSET 4-73
HPIB DISK 4-74
HP-MSIB CARD 4-75
HYS LEVEL 4-75
IMAGE N START 4-76
IMAGE N STOP 4-76
IMAGE SHIFT 4-78
INPUT IMPED 4-78
INSERT or... 4-79
INTRNL MEMORY 4-79
key control 4-80
LABEL Y On Off 4-80
LAMBDA 4-81
LAST SEGMENT 4-82
LCL OSC START 4-82
LCL OSC STOP 4-83
LEFT PEAK 4-83

LEFT PIT 4-84
lim <-> ampcor 4-84
LIMITS On Off 4-85
LIMIT START 4-85
LINE 4-86
LINEAR 4-86
LINEAR Vlt Pwr 4-87
LINES On Off 4-87
LOAD FILE 4-88
LOCK HARMNC# 4-89
LOCK H# On Off 4-90
LOCKOUT ANOTATN 4-90
LOG CAL On Off 4-91
LOG dB/DIV 4-91
log/lin detectr 4-91
LOWER-> AMPCOR 4-92
LW MODE OptElec 4-93
marker excursn 4-94
marker readout 4-94
MAX HOLD A , MAX HOLD B , MAX HOLD C 4-94
MAX IN AutoMan 4-95
MAX MXR LEVEL 4-95
MIN HOLD A , MIN HOLD B , MIN HOLD C 4-96
MINIMUM PEAK 4-96
MINIMUM POINT 4-96
MIN PIT 4-97
MIN POINT 4-97
MKNOISE On Off 4-98
MKPAUSE On Off 4-98
MKR BW On Off 4-99
mkr bw/zoom bw 4-99
MKR NRM On Off 4-100
MK STOP On Off 4-100
modultn 4-101
MRK TRA A B C 4-101
NEG PK 4-101
NEXT MIN PK 4-102
NEXT PAGE 4-102
NEXT PEAK 4-103
NEXT PIT 4-103

NEXT SEGMENT 4-104
NO. OF STATES 4-104
NOISE ON OFF 4-105
NORMAL 4-105
oneshot math 4-106
OVERSWP On Off 4-106
PARTIAL ERASE 4-107
PATHLOK On Off 4-107
PAUSE 4-108
PEAK EXCURSN 4-108
PERIOD 4-109
PERSIST On Off 4-109
PIT EXCURSN 4-110
pit,min markers 4-110
POS PK 4-111
power 4-111
POWER FOR CAL 4-111
power meter 4-112
POWERON IP/LAST 4-112
preamp control 4-113
PREAMP N On Off 4-113
PRESEL CENTER 4-114
presel center 4-114
PRESEL DAC 4-115
pre-select 4-115
PRESEL HYS 4-116
PRESEL On Off 4-117
PRESEL PARTIAL 4-117
PRESEL PEAK 4-118
preset adc 4-119
preset input 4-119
PRESET USER 4-120
P STATE On Off 4-120
PURGE FILE 4-121
PWR AVG On Off 4-121
PWR BAR On Off 4-122
PWR MTR OptElec 4-122
PWR STP AutoMan 4-123
PWR SWP On Off 4-123
RB/SPAN RATIO 4-124

RBW AMP On Off 4-125
RBW FREQ On Off 4-125
READ AutoMan 4-126
recall 4-126
recall from... 4-127
RECALL LIMIT 4-127
RECALL MEMORY 4-128
RECALL STATE 4-128
RECALL TRACE A 4-129
RECALL USER 4-129
RECALL USERKEY 4-130
-> REF 4-130
REF LVL 4-131
REF LVL POSN 4-131
RELATIV On Off 4-132
REL LEFT 4-132
REL PWR On Off 4-133
REL RIGHT 4-133
REPLACE or... 4-134
RES BW AutoMan 4-135
RESTART 4-136
RIGHT PEAK 4-136
RIGHT PIT 4-137
RIN SYS On Off 4-137
ROM VERSION 4-138
RSPSVTY AutoMan 4-138
SAMPLE 4-139
save 4-140
SAVE LIMIT 4-140
SAVE MEMORY 4-141
SAVE STATE 4-141
save to... 4-142
SAVE TRACE A 4-142
SAVE USER 4-143
SAVE USERKEY 4-143
select adc 4-144
SELECT CHAR 4-145
select input 4-145
SERVICE REQUEST 4-146
show states 4-147

SIG ID AMPTD Δ 4-147
SIG ID -> CF 4-148
SIG ID MAN OFF 4-148
sig id options 4-149
SIGNAL IDENT 4-149
SIG TRK LIMIT 4-150
SIG TRK On Off 4-150
SINGLE SWEEP 4-151
SPACE 4-151
SPAN 4-152
SRC ATN AutoMan 4-152
SRC OSC INT EXT 4-153
SRC PWR OFFSET 4-154
SRC PWR On Off 4-154
START 4-155
STATE 4-155
STEP 4-156
STM RSP MIL Cpl 4-157
STM RSP On Off 4-157
STOP 4-158
STORE A 4-158
STORE OPEN ->C 4-159
STORE THRU->B 4-160
STP GAIN AutoMan 4-161
SWPTIME 4-161
SWPTIME AutoMan 4-162
SYS COR AutoOff 4-162
THRESHD On Off 4-163
TITLE 4-164
trace A B C 4-165
TRACE LENGTH 4-165
trace linmath 4-166
trace logmath 4-166
trace norm 4-166
TRACE PRESET 4-167
track gen 4-167
TRACKNG ADJUST 4-168
TRACKNG PEAK 4-169
TRIGGER DELAY 4-170
TRIGGER FREE 4-171

TYPE 4-171
Δ -> SP 4-172
units menu 4-172
UPPER-> AMPCOR 4-173
UPPER/LOWER 4-173
USR PWR On Off 4-174
VBW AMP On Off 4-175
VBW CPL Rx SA 4-176
VBW/RBW RATIO 4-176
VERT OFFSET 4-177
VID AVG On Off 4-177
VID BW AutoMan 4-178
VIDEO 4-179
VIDEO LEVEL 4-179
VID LIN On Off 4-180
VIEW A/BLANK A 4-180
VOLT 4-181
WARNING On Off 4-181
WATT 4-182
WAVELEN 4-182
X 4-182
ZERO 4-183
ZOOM TO RES BW 4-184

5. Troubleshooting
Troubleshooting Tools 5-1
Built-in Tools 5-1
Software Programs 5-1
Status Indicators 5-2
Element Status Indicators 5-2
Error Indicators 5-2
Active Indicators 5-3
HP 70001A Mainframe Status Indicators 5-3
Error Message Reporting 5-3
Error Message Block 5-3
Error Report Screen 5-3
Display-Disruptive Errors 5-5
Display Tests 5-5
Analyzer Test 5-5
Background Tests 5-6
HP-MSIB Troubleshooting Utility 5-7
Software Programs 5-7
System Diagnostics 5-7
Operation Verification 5-7
Troubleshooting Procedures 5-9
Troubleshooting a Lightwave Signal Analyzer 5-9
Troubleshooting Procedure—Part 1 5-10

Troubleshooting Procedure—Part 2 5-10
Categorizing Failures 5-11
Troubleshooting from the Front Panel 5-12
Troubleshooting Over the HP-IB 5-13
System Diagnostics 5-14
Running Diagnostics 5-14
Running Diagnostics from the Front Panel 5-14
Running Diagnostics Remotely 5-15
System Diagnostics Requirements: Version C.03.00 5-16
HP-MSIB Addressing Order 5-16
Calibrator Signal 5-16
Making Backup Copies of System Diagnostics 5-16
Saving the Contents of RAM 5-17
Read/Write LO Memory 5-18
System Diagnostics Utilities 5-20
Running the System Diagnostics Utilities 5-20
Recovering from Problems while Running System Diagnostics 5-21
Memory Overflow Message 5-21
Other Error Messages 5-21
No System Diagnostics in RAM 5-21
Catastrophic Failures 5-22
Symptoms 5-22
Error Indicators 5-22
I/O or HP-MSIB Indicator is On 5-22
Volt/Temp Error Indicator LED 5-23
Current Error Indicator LED 5-24
I/O Check Error Indicator LED 5-24
Abnormal Screen Display 5-25
HP-MSIB Troubleshooting 5-25
Module Removal Method 5-26
Repair Procedures 5-27
Repair by Customer 5-27
Module-Level Support 5-27
Assembly/Component-Level Support 5-27
System or Module Repair by Hewlett-Packard 5-28
On-Site Service Option 5-28
Additional Service Options 5-28

6. Error Messages
User Application Errors 0001 – 0999 6-2
Operating Errors 2000 – 2999 6-13
Hardware Warning Errors 6000 – 6999 6-22
Hardware Broken Errors 7000 – 7999 6-25
Computation Errors 8000 – 8999 6-35
Factory-Use Only Errors 9000 – 9999 6-36

A. Theory of Operation

Spectrum Analyzer A-1
Lightwave Signal Analyzer A-2
Modular Spectrum Analyzer and Lightwave Signal Analyzer Block Diagrams . . . A-4
Individual Module Block Diagrams A-5

B. Inputs and Outputs on Modular Spectrum Analyzer Modules

HP 70300A RF Tracking Generator and HP 70301A Microwave Tracking Generator B-1
Front-Panel Ports B-2
Rear-Panel Ports B-4
HP 70310A Precision Frequency Reference B-6
Rear-Panel Ports B-6
HP 70600A preselector B-8
Front-Panel Ports B-8
Rear-Panel Ports B-9
HP 70620A Preamplifier/HP 70620B Preamplifier/HP 70621A Preamplifier B-10
Front- and Rear-Panel Ports B-10
HP 70810B Lightwave Section and HP 70810B Option 850 Lightwave Section . . B-12
Front-Panel and Rear-Panel Ports B-13
HP 70900B Local Oscillator Source B-15
Front-Panel Ports B-15
Rear-Panel Ports B-16
HP 70902A IF Section (Resolution Bandwidth 10 Hz–300 kHz) B-17
Front-Panel Ports B-17
Rear-Panel Ports B-18
HP 70903A IF section (Resolution Bandwidth 100 kHz–3 MHz) B-19
Front-Panel Ports B-19
Rear-Panel Ports B-20
HP 70904A RF section (100 Hz to 2.9 GHz) B-21
Front-Panel Ports B-21
Rear-Panel Ports B-22
HP 70905A RF section AND 70905B RF Section (50 kHz to 22 GHz) B-23
Front-Panel Ports B-23
Rear-Panel Ports B-24
HP 70906A RF Section (50 kHz to 26.5 GHz) B-25
Front-Panel Ports B-25
Rear-Panel Ports B-26
HP 70907A/B external mixer interface moduleU; B-27
Front-Panel Ports B-27
Rear-Panel Ports B-29
HP 70908A RF Section B-30
Rear-Panel Ports B-30
HP 70909A RF Section B-31
Front-Panel Ports B-31
Rear-Panel Ports B-32
HP 70910A RF Section B-33
Front-Panel Ports B-33
Rear-Panel Ports B-34

C. Fiber-Optic Connections
The Importance of a Good Connection C-1
Characterizing a Connection C-1
Dry and Wet Connections C-2
Cleaning Dry Connectors C-2
Using Index-Matching Compounds If Necessary C-3
Applying Index-Matching Compound C-3
Cleaning Wet Connectors C-4
Making the Connection C-4
Fiber-Optic Cable and Connector Summary C-5

D. ASCII Codes, Control Codes, and Escape Characters
American Standard Code for Information D-2
Control Codes and Escape Characters D-3
Position the Pen, Clear or Move Text, or Beep D-3
Enhance Text D-3
Change Color D-4
Display-Functions Mode D-4

Glossary

Index

Figures

1-1. Front-Panel Controls 1-3
1-2. Instrument Keypad 1-5
1-3. How to Access Analyzer Functions 1-6
1-4. Displayed Measurement Results 1-8
1-5. Calibration Signal 1-12
1-6. Common Measurement Indicators 1-14
1-7. Lightwave Signal Analyzer Measurement Indicators 1-17
1-8. Auxiliary Measurement Indicators 1-19
1-9. Front-Panel Operation Indicators 1-21
1-10. Preset User Softkeys 1-23
1-11. Transfer an Analyzer Softkey to User-Softkey Menu 1-24
1-12. Inserting the Memory Card 1-29
2-1. `Freq` Softkey Menu Map 2-2
2-2. `Amptd` Softkey Menu Map 2-3
2-3. `Marker` Softkey Menu Map 2-4
2-4. `BW,Swp` Softkey Menu Map 2-5
2-5. `Traces` Softkey Menu Map 2-6
2-6. `State` Softkey Menu Map (1 of 5) 2-7
2-7. `State` Softkey Menu Map (2 of 5) 2-8
2-8. `State` Softkey Menu Map (3 of 5) 2-9
2-9. `State` Softkey Menu Map (4 of 5) 2-10
2-10. `State` Softkey Menu Map (5 of 5) 2-11
2-11. `Misc` Softkey Menu Map (1 of 2) 2-12
2-12. `Misc` Softkey Menu Map (2 of 2) 2-13
3-1. Marker-Peak Functions Analyze Trace Data 3-25
4-1. Blanked Annotation 4-18
4-2. Catalog of User Memory with External Memory Selected 4-34
4-3. Locating the Data Line and Character List 4-43
4-4. `CONFIG` Displays System Configuration 4-44
4-5. `EXTEND STATE` Lists Module-Level Parameters 4-63
4-6. Catalog of Internal Memory 4-88
4-7. Measurement Using Normal-Peak Detection 4-105
4-8. Coupling and Accuracy Indicators 4-135
4-9. Measurement Using Sample-Peak Detection 4-139
4-10. `STATE` Displays Parameters Under Your Control 4-156
4-11. Title-Line and Title-Entry Window Positions 4-164
5-1. Error Reporting 5-2
5-2. Error Report Screen 5-4
5-3. `MORE ERRORS` Softkey 5-5
5-4. `ANALYZR TEST` Softkey 5-6

5-5. System Diagnostics Softkey Menu 5-15
A-1. Simplified Spectrum Analyzer Block Diagram A-1
A-2. Simplified Lightwave Signal Analyzer Block Diagram A-3
A-3. Modular Analyzer Configuration Block Diagram A-4
A-4. Modular Source Configuration Block Diagram A-5
A-5. HP 70600A/70601A Preselector Block Diagram A-6
A-6. HP 70620A/B Preamplifier/HP 70621A Preamplifier Block Diagram A-6
A-7. HP 70907A External Mixer Interface Module Block Diagram A-6
A-8. HP 70904A RF Section Block Diagram A-7
A-9. HP 70905A/905B/906A/906B RF Section Block Diagram A-7
A-10. HP 70908A RF Section Block Diagram A-7
A-11. HP 70810B Lightwave Section Block Diagram A-8
A-12. Dual HP 70810B Lightwave Section Block Diagram A-8
A-13. HP 70903A IF Section Block Diagram A-9
A-14. HP 70902A IF Section Block Diagram A-9
A-15. HP 70902A IF Section and HP 70903A IF Section Interconnection Block Diagram A-9
A-16. HP 70900B Local Oscillator Source Block Diagram A-10
A-17. HP 70310A Precision Frequency Reference Block Diagram A-10
A-18. HP 70301A Microwave Tracking Generator Block Diagram A-11
A-19. HP 70300A RF Tracking Generator Block Diagram A-11
A-20. HP 70000 RF and Microwave Source with an HP 70900B Local Oscillator Source Configuration Block Diagram A-12
B-1. HP 70300A RF Tracking Generator and HP 70301A Microwave Tracking Generators, Front View B-2
B-2. HP 70300A RF Tracking Generator and HP 70301A Microwave Tracking Generators, Rear View B-4
B-3. HP 70310A Precision Frequency Reference, Rear View B-6
B-4. HP 70600A Preselector, Front View B-8
B-5. HP 70600A Preselector, Rear View B-9
B-6. HP 70620A/B Preamplifier and HP 70621A Preamplifier Front View B-11
B-7. HP 70810B Lightwave Section Front and Rear View B-13
B-8. HP 70900B Local Oscillator Source, Front View B-15
B-9. HP 70900B local oscillator source, Rear View B-16
B-10. HP 70902A IF Section, Front View B-17
B-11. HP 70902A IF Section, Rear View B-18
B-12. HP 70903A IF Section, Front View B-19
B-13. HP 70903A IF section, Rear View B-20
B-14. HP 70904A RF section, Front View B-21
B-15. HP 70904A RF section, Rear View B-22
B-16. HP 70905A RF section and HP 70905B RF sections, Front View B-23
B-17. HP 70905A RF section and HP 70905B RF section, Rear View B-24
B-18. HP 70906A RF section, Front View B-25
B-19. HP 70906A RF section, Rear View B-26
B-20. HP 70907A/B external mixer interface moduleU;, Front View B-27
B-21. HP 70907A/B external mixer interface moduleU;, Rear View B-29
B-22. HP 70908A RF Section B-30
B-23. HP 70909A RF Section Front Panel B-31
B-24. HP 70909A RF Section Rear Panel B-32
B-25. HP 70910A RF Section Front Panel B-33
B-26. HP 70910A RF Section Rear Panel B-34

Tables

1-1. Softkey Settings when Executing Calibration Procedure 1-9
2-1. Function Categories Accessed by Top-Level Keys 2-1
3-1. SoftKey Quick Reference, Organized by Function 3-2
4-1. Signal Path versus Input Attenuation 4-19
4-2. Catalog of User Memory 4-35
4-3. External Mixing Bands and Associated Mixing Harmonics 4-69
4-14. Frequency Ranges and Corresponding Harmonic Numbers 4-77
4-15. Frequency Ranges and Corresponding Harmonic Numbers 4-116
4-13. Preselector DAC Frequency Bands 4-118
B-1. Preamplifiers and Their Frequency Ranges B-10
D-1. ASCII Characters (codes 0 through 127) and HP 70004A Color Display Characters D-2
D-2. Control Codes D-3
D-3. Escape Characters that Control the Pen, Clear Text, and Scroll Text D-3
D-4. Escape Characters that Control Enhancements D-4

1

Overview

Notation Conventions Used in this Manual

The display presents seven top-level softkeys on the left side of the display that appear when (MENU) is pressed. Pressing one of the top-level softkeys on the left, displays softkeys on the right side of the display. Each softkey that is displayed on the right either performs an analyzer function directly or accesses another menu of related softkeys. The name of the function appears on the display next to the activating softkey.

This manual uses the following conventions:

(KEY)	A key name that looks like this represents a key that is physically located on the instrument and is commonly referred to as a front panel key.
`softkey`	Text that looks like this (with all lowercase letters) represents a softkey that accesses another menu of related softkeys.
`SOFTKEY`	Text that looks like this (with all uppercase letters) represents a softkey that executes its function.
`Display Text`	Text that looks like this represents messages that appear on a display.

When information applies to both a spectrum analyzer and a lightwave signal analyzer, the generic term, “analyzer” is used throughout this manual.

Front-Panel Controls

Front-panel controls are summarized in Figure 1-1. Functions are organized into three groups which are accessed with three front panel keys:

- The (MENU) key accesses all analyzer functions.
- The (DISPLAY) key accesses all display functions.
- The (USER) key accesses a set of analyzer functions, custom-made or factory-preset, which facilitate analyzer measurements.

In addition, analyzers installed in an HP 70004A color display have an instrument keypad that executes commonly used analyzer functions.

If the analyzer is being controlled by a computer, press the (LCL) (or (LOCAL)) key to regain front panel control.

Analyzer Functions

Functions are activated by pressing the keys around the perimeter of the display screen or on the instrument keypad. The functions are organized in levels, called softkey menus. The (MENU), (USER), and (DISPLAY) keys access the top-level menus of softkeys. Lower-level softkeys are accessed by pressing softkeys having lower-case labels. Press `MORE` to access additional softkeys. Press previous-menu and return keys, `prev menu` or (◀), to view the previously displayed level of softkeys. The (◀) key can be used to recall the last ten softkey entries. Some of the softkeys display information that exceeds the space on the display. To view additional "pages" of information, press `MORE`.

Some softkeys switch between two states, such as internal or external (INT/EXT), automatic or manual (AutoMan), and on or off (On Off). An underscore on the softkey label indicates which softkeys and operating states are selected.

Active Function and Data Entry

Once a key is pressed, its function becomes active, meaning its value can be changed. The active function readout on the left side of the screen displays the active function. In addition, the key for the active function is highlighted in inverse video or underscored. (The label of immediately executed functions is highlighted momentarily.)

Use the numeric keypad, knob, and (▲) or (▼) step keys to change the value of the active function. If the function requires an entry for units, such as hertz or volts, unit softkeys appear after a number is entered with the numeric keypad or knob. Press the desired units softkey to complete the data entry.

Press (HOLD) to blank the active function readout, and disable the knob, numeric keypad, and step keys until the next key is pressed.

Front-Panel Controls

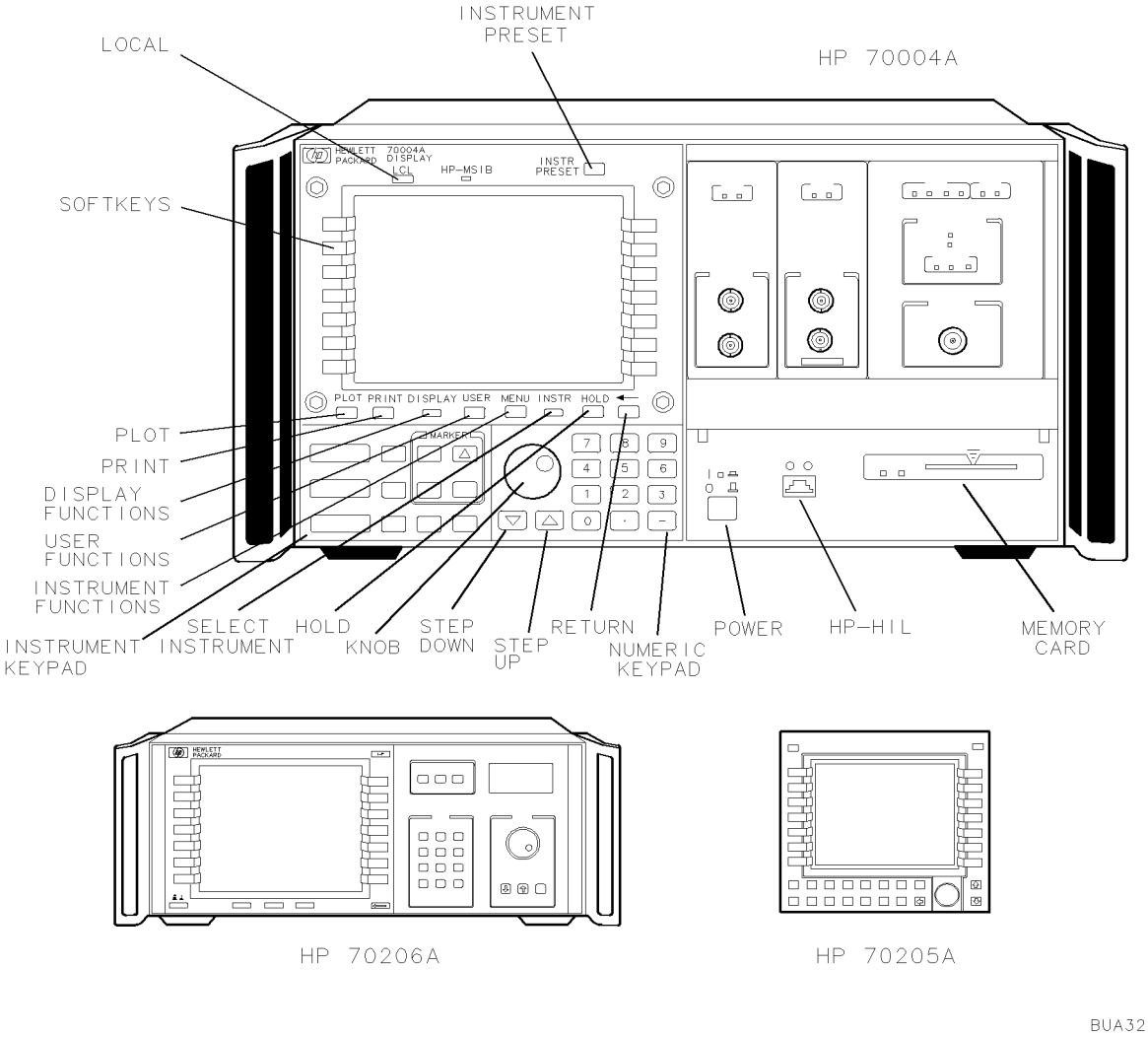

Figure 1-1. Front-Panel Controls

Instrument preset — (INSTR PRESET) changes all instrument settings to their preset settings. Appendix A lists preset settings. (This key is called (I-P) on some models.)

Local — (LCL) (moving counterclockwise) reinstates front panel operation if the instrument has been under remote control. (This key is called (LOCAL) on some models.)

Softkeys — execute instrument or display functions, depending on whether (DISPLAY), (MENU), or (USER) was selected. The softkeys are located around the perimeter of the display screen.

Plot — (PLOT) plots the analyzer display if a plotter is connected to the display HP-IB port.

Print — (PRINT) prints the analyzer display on a graphics printer if one is connected to the display HP-IB port.

Display functions — (DISPLAY) accesses all display functions. (This key is called (DSP) on some models.)

User functions — (USER) accesses functions that facilitate custom measurement procedures. (This key is called (USR) on some models.)

Instrument functions — (MENU) accesses all analyzer functions. If other instruments, such as a digitizer, are added to the modular analyzer as a separate instrument, (MENU) accesses the functions of each instrument, depending on the selection made by (INSTR) (or NEXT INSTR). (MENU) does not access the display functions. (This key is called (MNU) on some models.)

Instrument keypad — executes commonly used analyzer functions and duplicates operation of corresponding (MENU) softkeys.

Select instrument — selects instrument that is controlled by the front panel keys. For example, if a system contains a voltmeter and an analyzer, each press of (INSTR) activates the instruments individually. If (INSTR) is not on your instrument, press (DISPLAY), NEXT INSTR. Each press of NEXT INSTR selects another instrument.

Hold — (HOLD) blanks the active-function readout and disables the front panel knob, numeric keypad, and step keys until another function softkey is pressed.

Knob — provides data entry, moves the marker, or moves the cursor through the character set.

Step down — (▼) decreases the value of the active function or moves the cursor in the data line.

Step up — (▲) increases the value of the active function or moves the cursor in the data line.

Return — (◀) views previously displayed softkeys or moves the cursor to the beginning of the data line.

Numeric keypad — provides data entry.

Power — controls the line power to the analyzer. If an HP 70206A system graphics display or HP 70004A color display is added to the modular analyzer system, the power to the display must also be turned on.

HP-HIL — The Hewlett-Packard Human-Interface-Link (HP-HIL) keyboard can be connected to the HP-HIL connector at the front panel of the HP 70004A color display. Many front panel functions can be initiated at the keyboard instead of by the front panel keys.

Memory card — provides storage space and accesses routines and instrument personalities. These are called down-loadable programs (DLPs).

Accessing Analyzer Functions with the Instrument Keypad

Use the instrument keypad for fast operation. The instrument keypad provides easy access to commonly used analyzer functions, duplicating the operation of corresponding (MENU) softkeys that surround the display screen. The instrument keypad is not available on the HP 70205A graphics display or the HP 70206A system graphics display.

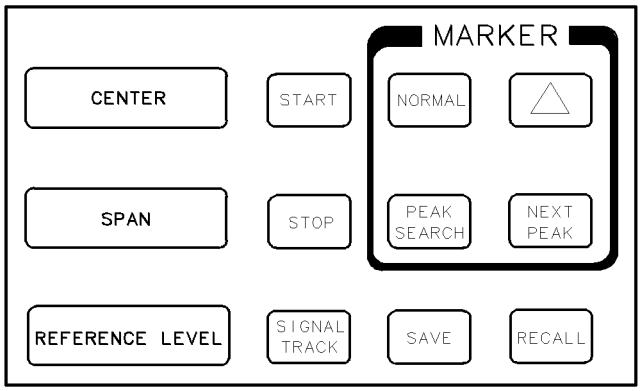

Figure 1-2. Instrument Keypad

Accessing Analyzer Functions with the (MENU) Key

Use the (MENU) softkeys to access all analyzer functions. The functions are divided into seven categories which are accessed with seven keys at the left side of the display screen. The underscore indicates which group of functions is selected.

After selecting a function category, press any softkey at the right side of the display screen to execute an analyzer function.

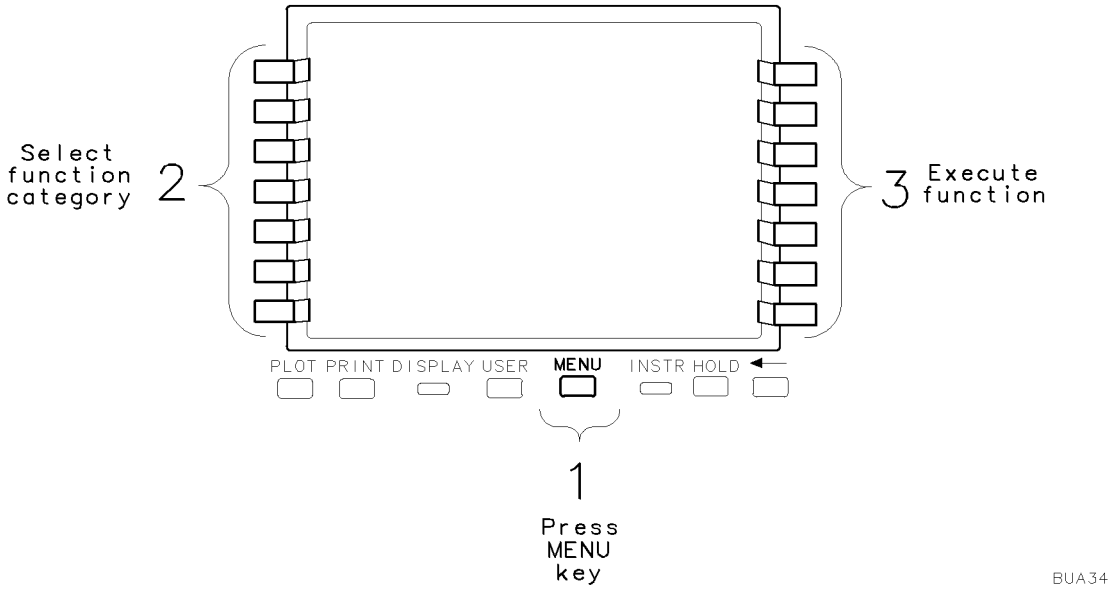

Figure 1-3. How to Access Analyzer Functions

The softkey maps in Chapter 2 illustrate the location of all the softkeys that are accessed by pressing (MENU). (Refer to Chapter 4 for a description of each softkey.)

Preparing the Analyzer for Measurements

The analyzer requires proper connection of cables, as shown in the *HP 70000 Modular Spectrum Analyzer Installation and Verification Manual*. Once the system cables are connected, most analyzer models are ready for use after they have been calibrated, continue at step 7.

The following procedure provides some preliminary checks for nonstandard analyzers. Follow the procedure to activate the analyzer, and check its hardware and error-correction status.

1. Apply power to all mainframes and displays in the system by setting all LINE switches on (1).
2. Wait about 5 seconds while the analyzer performs a self-check, then press the instrument-preset key, (INSTR PRESET) or (I-P).
3. The analyzer is operating when a trace sweeps across the display. The MEASURE indicator LED illuminates as the sweep progresses. As an additional indicator, the green, active (ACT) status indicators are lit on the analyzer modules, except when the (DISPLAY) key has been pressed. Also, if your analyzer has more than one signal path, for example, more than one RF input port or more than one IF module, the green status indicator may be off on modules not passing or processing the input signal.
4. If your analyzer is sweeping, skip to step 5.
5. If the analyzer is not activated when power is applied, press (INSTR), `HP 70900B`. (If your analyzer does not have an (INSTR) key, press (DISPLAY), then press `NEXT INSTR` repeatedly until the analyzer is activated.) If the analyzer is still not activated when power is applied, inspect the rear panel HP-MSIB interconnections for tightness and then cycle power.

   If you cannot activate the analyzer, press (DISPLAY), `address map` to inspect the configuration of your system. Move the highlighted rectangle along the bottom row of the address map by turning the front panel knob. The local oscillator module must be in the bottom row of the map. If it is not, change the HP-MSIB row-address switch to row-address 0. See the *HP 70000 Modular Spectrum Analyzer Installation and Verification Manual* for instructions.
6. Inspect the status indicators on the front panels of the analyzer modules. If an error (ERR) indicator is lit, press (DISPLAY), `REPORT ERRORS` to learn what caused the error and clear the error indication. Press (MENU) or (USER) to reactivate the analyzer display. If any other error occurs, refer to the *HP 70000 Modular Spectrum Analyzer Installation and Verification Manual* for installation, verification, and troubleshooting instructions. Refer to Chapter 6 for a description of system error messages.

Note For an analyzer with an external interface module for input, such as an HP 70907A external mixer interface module, connect any signal within the frequency range of your external mixer, and tune to that signal.

7. Verify that the analyzer can display signals sent to the RF INPUT port. Connect the CALIBRATOR signal to the input port, then press the following keys.

   Press (INSTR PRESET) (or (I-P))

   `Freq`

   `SPAN` 1 `MHz`

   `CENTER` 300 `MHz`

8. If your display resembles Figure 1-4, skip to step 7.

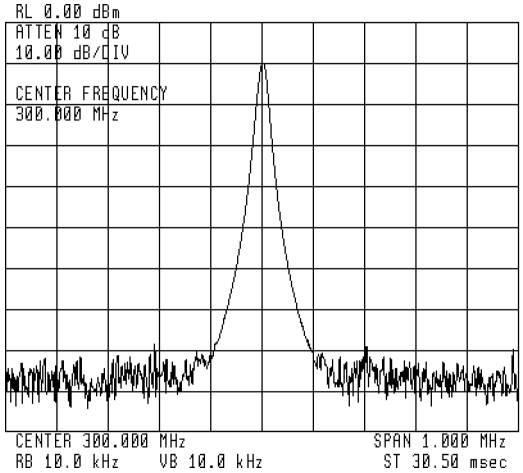

Figure 1-4. Displayed Measurement Results

If the analyzer does not display the input signal and has more than one input port, the input port you are using may not be active. Follow this procedure to activate the input port:

a. Press `State`

b. Press `select input`

c. Press the key corresponding to the desired input.

If the calibrator signal still is not present on the analyzer screen, see that the interconnect cables are properly installed and are tightly secured. If necessary, refer to the *HP 70000 Modular Spectrum Analyzer Installation and Verification Manual* for complete installation instructions.

9. UNCOR appears at the upper right of the graticule if your analyzer needs calibrating with the built-in correction routine. Since the calibration routine lasts about three minutes, execute it only when the analyzer requires calibration:

   - At the beginning of each day.
   - After extreme temperature changes.
   - After selecting a new input port.
   - After moving the analyzer.

   To execute the routine, follow this three-minute procedure:

   - Connect the CALIBRATOR signal to the input port, unless measuring signals at the input port on an external mixer interface module (for example, HP 70907A external mixer interface module).

     Press (INSTR) (or (I-P))

     Amptd

     CAL ALL

   - If the calibration procedure fails, check the settings of the (MENU) softkeys in the following table.

Table 1-1. Softkey Settings when Executing Calibration Procedure

Key	Keystrokes that Access Key	Key Setting when Using Input Port on External Mixer Interface Module	Key Setting When Using Standard RF Input Ports
FREQ FOR CAL	Amptd MORE cal menu	321.4 MHz	300 MHz
POWER FOR CAL	Amptd MORE cal menu	–35 dBm	–10 dBm
CAL SRC INT EXT	Amptd MORE cal menu cal enable	INT	EXT

   - Verify that the UNCOR indicator is not present.

10. The analyzer is now ready for operation. To meet specifications, apply power for one hour before calibrating.

Electrical Cable Connections

Before making any measurement, be sure that all electrical cables and connectors are clean, in good mechanical condition, and properly tightened.

CAUTION To assure proper electrical connection and no connector damage, all APC 3.5 and SMA connectors must be torqued five to eight inch-pounds. Do not exceed eight inch-pounds.

Fiber-Optic Cable Connections

WARNING **To avoid the possibility of damage to your eyes, verify a disabled output at the light source before any cleaning, connecting, or disconnecting of optical system components.**

When making measurements with a lightwave signal analyzer, it is important that all fiber-optic connections be made carefully. Both the front panel fitting and the source cable have a protruding fiber-optic tip. Lightwave measurements demand precision mating of flawless fiber ends.

CAUTION The following precautions help prevent fiber damage and help assure accurate light measurements.

- Exposed fiber-optic tips are easily scratched. Do not allow any object to touch an unprotected tip. This precaution is particularly important when installing a connector interface and when making and breaking connections.
- Never insert any cleaning tool into an optical connector ferrule; this may cause damage that can affect the optical system.
- Do not touch an exposed fiber-optic tip. An oily fingerprint requires cleaning with cleaning solution.
- Before any mating of fiber-optic tips, clean the tips with special tape to assure no dust or other particles remain.
- In addition to tape cleaning, clean more thoroughly with cleaning solution as routine maintenance or if measurements reveal a slightly lower than expected power level or an increase in reflection intensity noise.
- Always replace the protector caps on any exposed fiber-optic tip.

Cleaning Optical Connectors

The Hewlett-Packard cleaning kit, HP 15475A, includes recommended cleaning materials and instructions for optical connectors. For optical connector cleaning information, refer to the kit instructions or “Cleaning Dry Connectors” in Appendix C.

Making a Measurement

Instrument Preset

Execute the instrument-preset function at the beginning of measurements to place the analyzer into a known state. Pressing the instrument-preset key, (INSTR PRESET), configures a spectrum analyzer and lightwave signal analyzer differently.

- A spectrum analyzer is preset to measure the full frequency range with trace A, using normal peak detection, 10 dB of input attenuation, and the widest resolution bandwidth available.
- A lightwave signal analyzer is also preset to measure the full frequency range with trace A, using normal peak detection, and the widest resolution bandwidth available. In addition, an optical signal path is selected, 5 dB of optical attenuation is set, and the power meter is activated.

Refer to the index for a complete listing of the spectrum analyzer and lightwave signal analyzer preset settings.

On some analyzer models, the instrument-preset key is called (I-P) instead of (INSTR PRESET). The operation of the two keys is identical.

Measurement Procedure

Measurements involve tuning the instrument to place a signal on the screen, then measuring the frequency and amplitude of the signal. Measurements can be made with either trace A, B, or C.

An input signal can be measured using the following four steps:

1. Set the span.
2. Set the center frequency.
3. Set the amplitude.
4. Activate the marker.

On all systems, measurements can be made using the softkeys located on the left and right side of the display. On models having an HP 70004A color display, the instrument keypad can be used interchangeably with the softkeys.

EXAMPLE 1-1. Measure the calibrator signal.

1. Turn on the spectrum analyzer, then connect the CALIBRATOR output to the RF INPUT.

Note To connect the calibrator signal on a lightwave signal analyzer:

- Turn on the analyzer, then connect the CALIBRATOR output to the RF INPUT on the HP 70810B lightwave section.
- Press `select input` and select the RF signal bypass path (lightwave section RF INPUT) by pressing the `IN 2 μW 70810B` softkey.
- Continue at step 2.

2. Set the frequency span.

   Press `Freq`, then press either the `SPAN` softkey or (SPAN) on the instrument keypad. Note that the `SPAN` softkey is highlighted, and also that `SPAN` is now displayed in the

active-function readout on the left side of the display. To reduce the frequency span to 1 MHz, press (1) and MHz.

The step keys, (▲) and (▼), and front panel knob also select function values.

3. Set the center frequency.

   Press CENTER (or press (CENTER) on the instrument keypad). This activates the center-frequency function, indicated by CENTER appearing in the active-function readout. To set the center frequency to 300 MHz, press (3), (0), (0), and MHz.

4. Set the amplitude.

   Place the signal peak at the reference level (top graticule line) for good measurement accuracy. To adjust the signal peak to the −10 dBm reference level, press either Amptd or (REFERENCE LEVEL) on the instrument keypad and then press (−), (1), (0), and dBm.

   The step keys or front panel knob can also be used to adjust the reference level. Using the knob is the easiest way to fine-tune the signal peak to the reference level.

5. Activate the marker.

   To place a marker on the highest peak contained in the trace, press either the Marker softkey or (NORMAL) on the instrument keypad. The marker displays both the frequency and the amplitude of the signal peak in the active-function readout area and in the upper right-hand corner of the display.

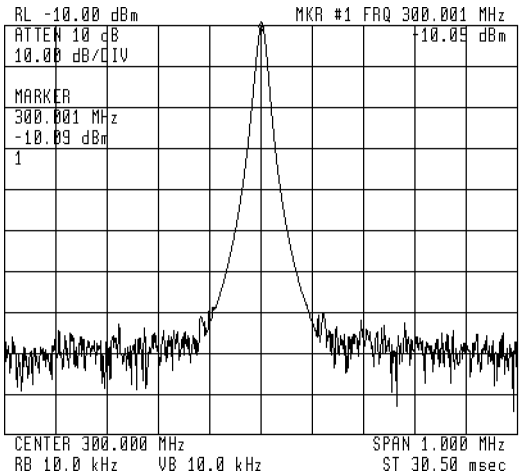

Figure 1-5. Calibration Signal

Use Coupled Functions to Maintain Accuracy Easily

To simplify measurements, some of the analyzer functions are coupled. When the value of a function changes, it induces a change in any function coupled to it. Coupled functions have an automatic and manual setting, which appears as AutoMan on the key label. When coupled, Auto is underscored.

When functions are uncoupled, Man is underscored and an asterisk (*) appears next to the function annotation at the display-screen perimeter. Refer to Figure 1-6 for the location of each "uncoupled function" asterisk.

To maintain amplitude and frequency accuracy, the resolution bandwidth, video-bandwidth, and span functions are coupled to the sweep-time function. The resolution bandwidth filter is the intermediate frequency (IF) filter. The video-bandwidth filter is a post-detection filter

that reduces the amplitude of high-frequency signals (noise). When coupled, the sweep time changes as the resolution or video bandwidth, or span changes. When uncoupled, the UNCAL indicator appears at the right side of the graticule when accuracy is affected by the new settings.

Limiting the signal level at the mixer input controls accuracy by avoiding gain compression. To limit signal levels at the input mixer, the input attenuation is coupled to the reference level. When coupled, the attenuation increases as the reference level increases. The limit can be changed to increase dynamic range.

The video bandwidth is coupled to the resolution bandwidth, and the resolution bandwidth is also coupled to the span. Set VID BW AutoMan and RES BW AutoMan to automatic to establish the coupling.

Resolving Closely Spaced Signals

Some measurements require adjustment of the resolution bandwidth (or IF) filter. The spectrum analyzer traces the shape of its IF filter as it tunes past a signal. Thus, if two equal-amplitude signals are close enough in frequency, the filter shapes can fall on top of one another and appear as a single response. If two signals are not equal in amplitude but are still close together, the smaller signal can be hidden under the response of the larger one.

To resolve two signals of equal amplitude, the resolution bandwidth must be less than or equal to the frequency separation of the two signals. For example, to resolve two signals of equal amplitude with a frequency separation of 1 kHz, a resolution bandwidth of 1 kHz or less should be used. Phase noise, seen along the lower skirt of the displayed response, can also affect resolution.

Viewing Low-Level Signals

Low-level signals hidden by the analyzer noise floor can be viewed using several functions, all accessed by BW, Swp .

- Decrease the resolution bandwidth (RES BW AutoMan). The noise floor drops 10 dB as the resolution bandwidth is narrowed by a factor of 10. However, to maintain amplitude accuracy, the sweep time should be set to automatic to activate coupling.
- Decrease the video bandwidth (VID BW AutoMan). Again, to maintain amplitude accuracy, the sweep time should be set to automatic to activate coupling.
- Use video averaging (VID AVG On Off). The video-averaging function averages the amplitude values contained in a sweep with the values obtained in the previous sweep. Since the video-averaging function processes stored trace data, amplitude accuracy is not affected by the sweep-time setting.
- Reduce the input attenuation (ATTEN AutoMan). Reduce the input attenuation with caution. Signals that are not displayed in narrow spans might still be present at the input. Reducing the input attenuation increases the signal level to the spectrum analyzer internal components, which are damaged permanently by 30 dBm levels or greater. For this reason, 0 dB input attenuation can be activated with the numeric keypad only.

Interpreting Measurement Results

The annotation on the display describes the progress and parameters of your measurements.

- Figure 1-6 describes the annotation that is displayed during most measurement procedures.
- Figure 1-7 describes additional display annotation that is unique to a lightwave signal analyzer.
- Figure 1-8 describes auxiliary measurement indicators.

A description of each annotation is listed alphabetically, following the related illustration.

Common Measurement Indicators

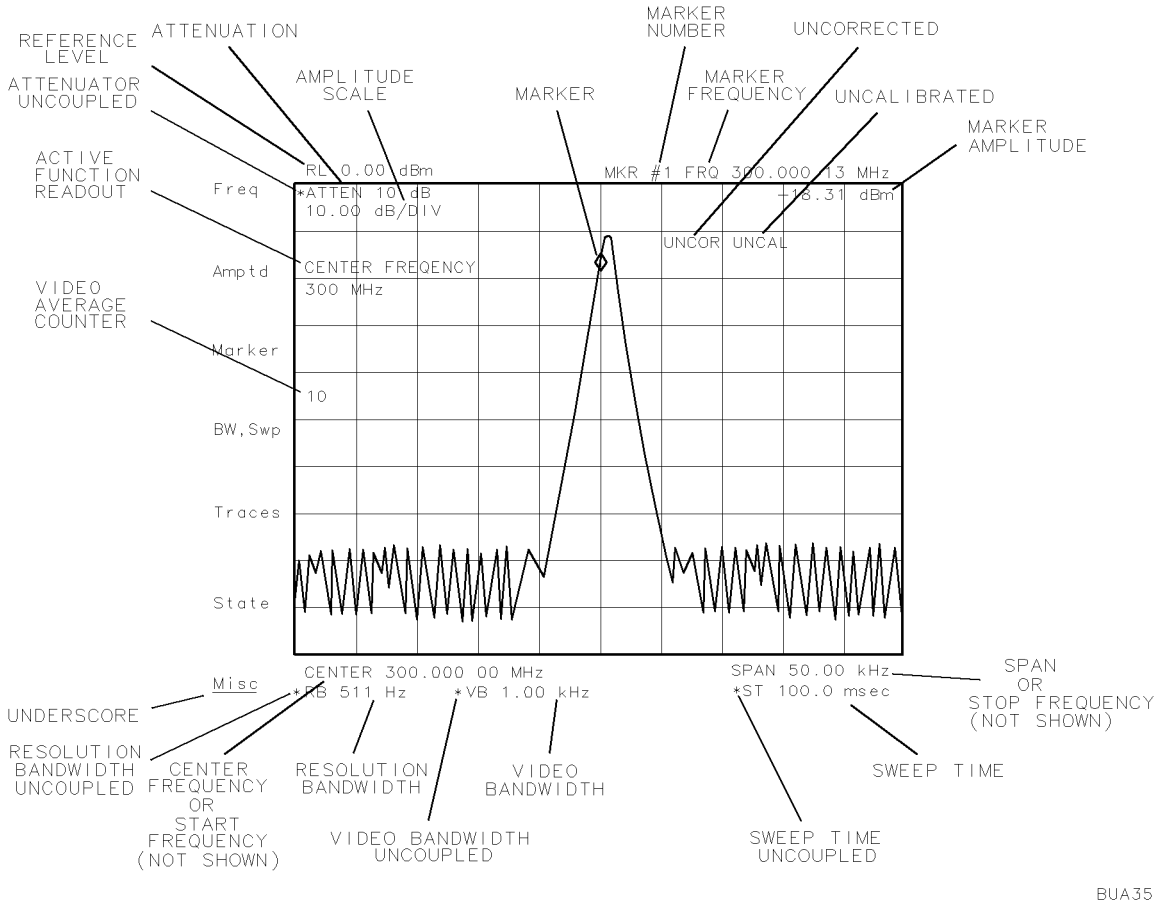

Figure 1-6. Common Measurement Indicators

Active function readout	indicates the currently active function.
Amplitude scale	specifies the amplitude value spanning of each major vertical graticule division.

Attenuation	specifies attenuation at the spectrum analyzer input. For a lightwave signal analyzer, the annotation specifies the optical attenuation, in optical power units, at the input of the lightwave section. Use the `ATTEN AutoMan` softkey to change the attenuator setting.
Attenuator uncoupled	indicates attenuator is not coupled to reference level. When coupled, the attenuator changes as the reference level changes to limit signal levels to the mixer, as specified by `MAX MXR LEVEL`. Signals are attenuated to avoid amplitude inaccuracies and spectrum analyzer damage. Set `ATTEN AutoMan` to automatic to recouple.
Center frequency	indicates frequency at the center of the graticule (or active trace).
Marker	measures a point on the active trace.
Marker amplitude	describes the absolute or relative position of the active marker in amplitude terms.
Marker frequency	describes the absolute or relative position of the active marker in terms of frequency, time, or period (1/frequency).
Marker number	displays the number of the active marker.
Reference level	indicates the absolute value of the top graticule line.
Resolution bandwidth	indicates the 3 dB bandwidth of the resolution filters.
Resolution bandwidth uncoupled	indicates the resolution bandwidth is not coupled to span. Measurements are inaccurate when `UNCAL` is displayed. Set `RES BW AutoMan` to automatic to recouple.
Span	indicates the frequency spanning the ten major horizontal divisions. The frequency range of one major graticule division equals span/10.
Start frequency	indicates frequency at left graticule edge (or beginning of active trace).
Stop frequency	indicates the frequency at the right graticule edge (or end of the active trace).
Sweep time	indicates the time duration of one complete sweep, or the time spanning the horizontal scale when frequency span equals zero.
Sweep time uncoupled	indicates the sweep time is not coupled to the resolution or video bandwidth, or span. When coupled, the sweep time changes to yield optimum accuracy as the resolution or video bandwidth, or span changes. Measurements are inaccurate when `UNCAL` is displayed. Set `SWPTIME AutoMan` to automatic to recouple.
Uncalibrated	indicates that the displayed amplitude of signal responses are inaccurate. This occurs when certain analyzer settings are decoupled. To recouple, adjust the settings for resolution bandwidth, video bandwidth, and sweep time to automatic (Auto).
Uncorrected	appears when the analyzer is not calibrated with its built-in correction factors. If `UNCOR` is displayed, execute the calibration routines described in Chapter 2.
Underscore	indicates the selected state of multi-state functions.
Video average counter	indicates the number of trace values that have been video averaged.
Video bandwidth	indicates the 3 dB bandwidth of the post-detection video filters.

Video bandwidth uncoupled

indicates the video bandwidth is not coupled to the resolution bandwidth. When coupled, the video bandwidth changes as the resolution bandwidth changes to maintain the ratio determined by `VBW/RBW RATIO`. Set `VID BW AutoMan` to automatic to recouple.

Lightwave Signal Analyzer Measurement Indicators

Figure 1-7 illustrates additional annotation that is unique to a lightwave signal analyzer. A description of each annotation is arranged alphabetically, following the figure. Figure 1-6 and Figure 1-8 illustrate common analyzer annotation.

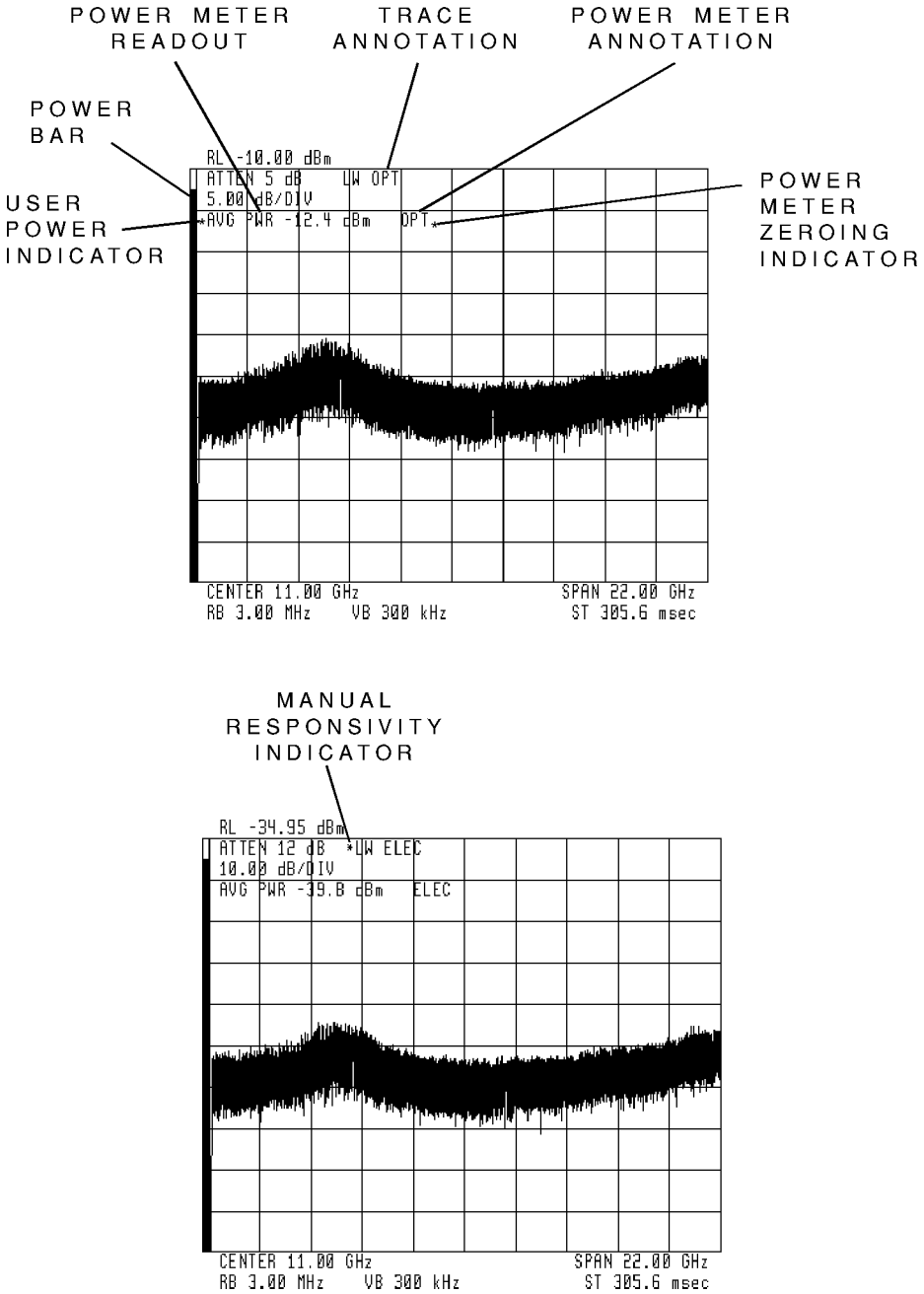

Figure 1-7. Lightwave Signal Analyzer Measurement Indicators

Manual responsivity indicator indicates that manual mode for the responsivity function has been selected. The manual responsivity indicator is an asterisk (*) that is displayed to the left of the trace annotation.

Power bar provides a graphical display of the average optical power measured by the power meter.

Power meter annotation indicates whether the power meter readout is annotated in optical or electrical units. Either `OPT` or `ELEC` is displayed for the respective unit annotation. The units annotation of the power meter is not coupled to the lightwave trace annotation.

Power meter readout displays the current average power meter readout annotated in optical dBm, electrical dBm, or watts units. Use the power meter softkeys to change the display annotation.

Power meter zeroing indicator is displayed while offsets in the power meter are being zeroed either in automatic or manual mode. The indicator is an asterisk (*) that is displayed to the right of the power meter annotation. Press the `ZERO` softkey to zero the power meter manually.

Trace annotation indicates whether the lightwave trace is annotated in optical or electrical units. Either `LW OPT` or `LW ELEC` is displayed for the respective unit annotation. The units annotation of the lightwave trace is not coupled to the power meter annotation.

User power indicator indicates that an optical power offset has been entered using the `USR PWR On Off` softkey. The indicator is an asterisk (*) that is displayed to the left of the power meter readout.

Auxiliary Measurement Indicators

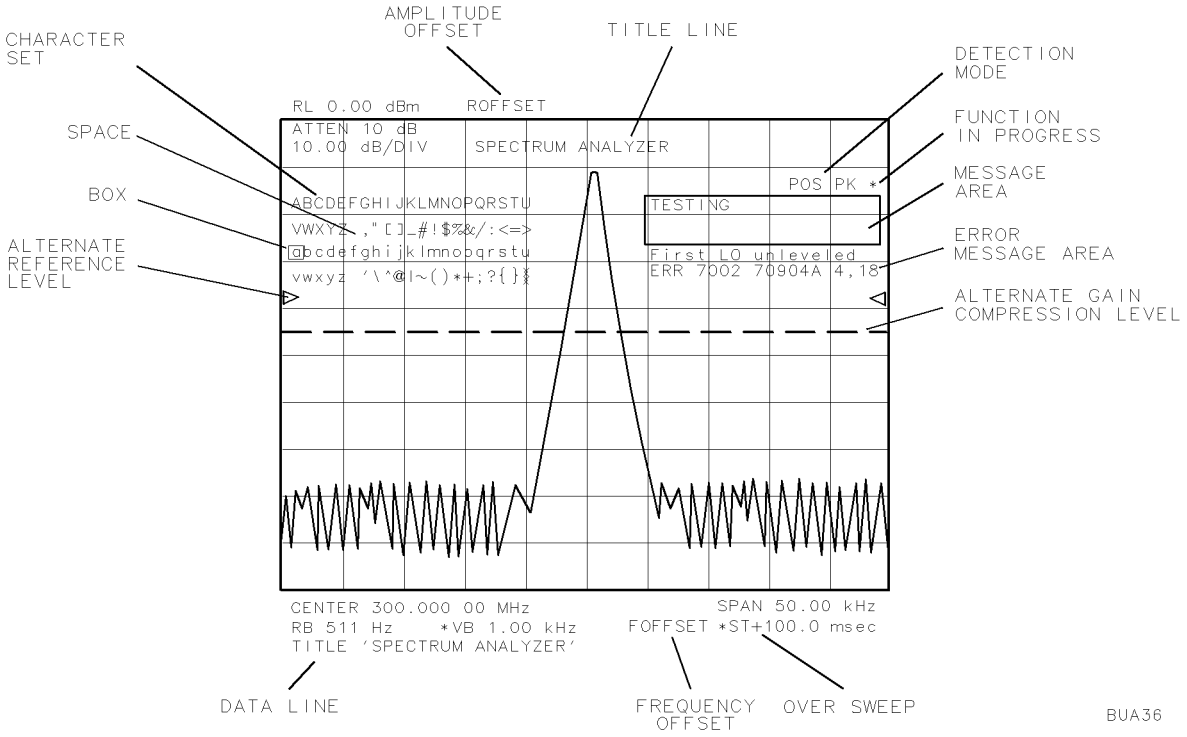

Figure 1-8. Auxiliary Measurement Indicators

Alternate gain compression level	if present, the gain-compression error of signal peaks below the dashed line does not exceed the gain-compression error of the mixer-input-level setting (usually about 1 dB for mixer levels of −5 dBm).
Alternate reference level	when present, supersedes the top graticule line.
Amplitude offset	indicates the amount of offset added to all amplitude annotation.
Box	selects the character for transfer to the title line or the data line. Also marks character for modification in the data line.
Character set	provides character entry into the title line or the data line.
Data line	is a scratch pad for composing or displaying custom functions. Also shows data entry for `TITLE` and `COMMAND` functions.
Detection mode	lights when measurements are made with optional detection modes.
Error message	explains the type of error sensed. Refer to Chapter 6 for a description of system error messages.
Frequency offset	indicates the amount of offset added to frequency annotation.
Function in progress	lights while some functions execute, such as video averaging. Also lights when some functions change while the sweep is progressing.
Message area	describes the progress of some functions.
Over sweep	provides faster sweep times, when autocoupled, by allowing an additional 2% of frequency error and 2 dB of amplitude error before displaying the uncalibrated indicator (UNCAL).
Space	enters a space into the title line or data line.
Title line	contains messages composed with `TITLE`.

Interpreting Front-Panel Indicators

The front panel indicators monitor the state of the analyzer during remote and local control, and provide warnings for hardware failures and operation errors.

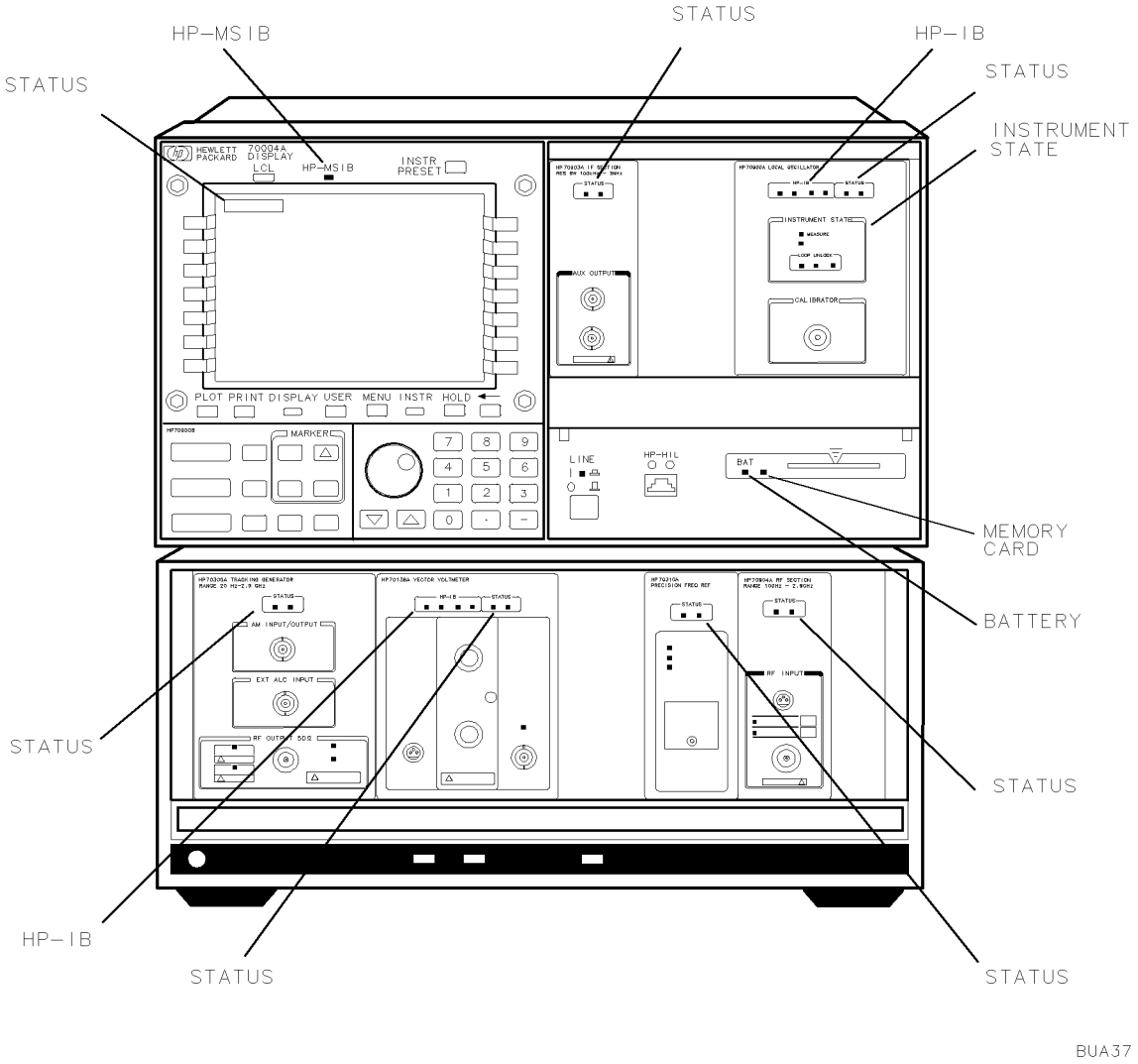

Figure 1-9. Front-Panel Operation Indicators

HP-MSIB

if the HP-MSIB indicator (called I/O CHECK on some models) turns on, inspect all module interconnections for tightness and then cycle power. If the HP-MSIB indicator remains on, consult the *HP 70000 Modular Spectrum Analyzer Installation and Verification Manual.*

Status

Denotes the active or error state. The active (ACT) indicator lights whenever analyzer functions are accessed by pressing the (USER) or (MENU) key. The error (ERR) indicator lights when the analyzer has sensed an error in that module. To learn the nature of the error and its source, press (DISPLAY), (REPORT ERRORS), which lists the error code and the module where the error originated. (See Appendix C for error code definitions.) Press (MENU) to return to the normal instrument display.

The display also has active and error indicators, an `A` and `E` that appear in the upper-left corner (or lower-right corner on some models) of the display. The active indicator lights when the (DISPLAY) key is pressed. The error indicator lights when an error is sensed by the display module.

HP-IB

describes the remote-control status of the analyzer. When power is applied, the analyzer is in local control and the indicators are off. If the analyzer is addressed by a computer, the remote indicator lights and the listen, talk, or service-request indicator lights depending on the computer instructions. The listen indicator lights when the analyzer has received instructions or data from the computer. The talk indicator lights when the analyzer has sent data or instructions to the computer. The service-request indicator lights when the analyzer has requested computer service.

Instrument state

describes the instrument operating state. The MEASURE indicator lights as the analyzer sweeps each frequency band and blanks during retrace and between frequency bands. The SELF TEST indicator lights whenever the analyzer is testing itself. The LOOP UNLOCK indicators usually light when a hardware failure occurs. If any of these indicators are lit, check all module interconnections for tightness, then cycle power. If the indicators remains lit, refer to the troubleshooting instructions in the *HP 70000 Modular Spectrum Analyzer Installation and Verification Manual.*

Using the (USER) Key

The user keys access a special set of analyzer functions that are designed to facilitate measurements. With the help of DEFINE USR KEY, you can build a set of user softkeys of your design. Use the user softkeys when your measurements require repeated use of the same functions. The contents of the user-key menu do not change when the analyzer is preset with the (INSTR PRESET) key or when power is cycled.

Presetting the User Softkeys

A preset group of softkeys facilitate the construction of menus for special measurements. To view the factory-preset user softkeys, press (USER). If the softkeys do not match those shown in Figure 1-10, your menu of user softkeys has been modified. PRESET USER eliminates unprotected custom softkeys and reinstates the preset user softkeys (see following note).

CAUTION Pressing PRESET USER removes unprotected custom softkeys. If your instrument contains diagnostics or personalities (such as scalar measurement softkeys), these softkeys are erased when PRESET USER is pressed.

EXAMPLE 1-2. Preset user-key menu.

Press (MENU) Misc MORE

key control PRESET USER

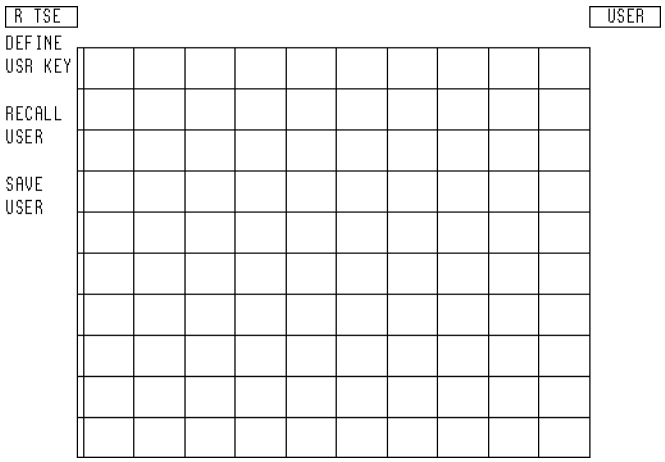

Figure 1-10. Preset User Softkeys

Creating a Custom Menu of User Softkeys

DEFINE USR KEY draws functions from the (MENU) softkeys. For example, add the limit lines softkey to the user menu as follows:

EXAMPLE 1-3. Transfer an analyzer softkey to the user-key menu.

Press (MENU) Misc

`MORE` `key control`

`DEFINE USR KEY` (Begins the transfer process and displays the (MENU) softkeys.)

`Misc` `MORE`

`limit lines` (Specifies the `limit lines` softkey for transfer.)

(USER) (Accesses the user menu.)

Press any softkey to indicate a spot for the `limit lines` softkey.

Figure 1-11 illustrates the location of the `limit lines` softkey in the user-softkey menu.

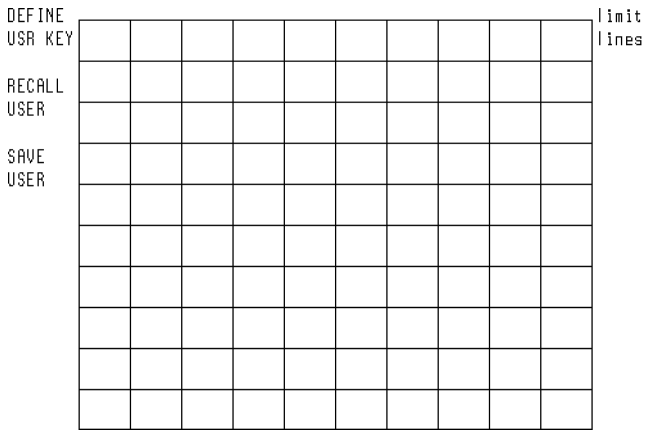

Figure 1-11. Transfer an Analyzer Softkey to User-Softkey Menu

To interrupt the transfer process, press 0 on the numeric keypad. `DEFINE USR KEY` may also be used to remove softkeys individually from the user menu. Softkeys are removed by replacing them with blank softkeys as shown in example 1-4.

EXAMPLE 1-4. Remove a user softkey.

Press (USER)

Any blank softkey

DEFINE USR KEY

Press the softkey you wish to blank.

Incorporating User-Defined Functions into the User-Softkey Menu

The menu of user softkeys can be configured with user-defined functions that have been stored in internal memory. User-defined functions are created and stored most efficiently with a computer program sent to the analyzer via HP-IB. Refer to the *HP 70000 Modular Spectrum Analyzer Programming Manual*. However, user-defined functions can also be created, modified or stored using information from the "Programming-Related Softkey Descriptions".

Restricting Instrument Operation to User Softkeys

If you wish to restrict analyzer operation to the user softkeys, execute the USERLOCK ON programming command via HP-IB, or execute USERLOCK ON using these front panel controls:

CAUTION Once USERLOCK is on, the (MENU) softkeys can be reenabled two ways only, either by executing the USERLOCK OFF command via HP-IB with the use of a computer, or by using the COMMAND softkeys which are normally accessed with the (MENU) key. Since USERLOCK ON deactivates the (MENU) key, the COMMAND softkeys must be transferred to the user-key menu before USERLOCK ON is executed, if a computer is unavailable. (See Example 1-3.)

EXAMPLE 1-5. Disable the (MENU) softkey.

1. Add the COMMAND softkey to the user menu, following the procedure in Example 1-3. (See Caution above.)
2. Press (USER).
3. Press COMMAND, then spell out USERLOCK ON by positioning the cursor underneath the characters contained in the alphabet shown on the analyzer display. Press SELECT CHAR to enter each letter into the data line. As each letter is entered, it appears in the data line at the bottom of the analyzer screen. (The character for "space" is located after Z.)
4. After USERLOCK ON is entered into the data line, press ENTER COMMAND to execute the USERLOCK ON function.

To reactivate the (MENU) key, execute USERLOCK OFF using the preceding procedure or a computer program. Use the step-up key, (▲) to position the cursor at the end of the data line. For additional information, see "User-Defined Softkey Descriptions" and "Programming-Related Softkey Descriptions" in Chapter 3.

Using the (DISPLAY) Key

The (DISPLAY) softkeys control the functions of the display module, which is a separate instrument in the analyzer system. Display operation is described in documentation for the HP 70004A color display, HP 70205A graphics display, and HP 70206A system graphics display displays. Some commonly used features are described here for your convenience.

- `DISPLAY PRESET` sets the format of the display to its preset state and assigns the (MENU) and user softkeys to the last instrument in the system that displayed measurement results.
- `NEXT INSTR` (select instrument) links the display and front panel controls with each instrument in the system, one at a time. Each press of `NEXT INSTR` accesses the next instrument in the system. If the analyzer is the only instrument in the system, `NEXT INSTR` accesses the analyzer. `NEXT INSTR` does not access the display.
- `PRINT` reproduces displayed results on a peripheral, raster-type graphics printer when it is connected to the display HP-IB port.
- `PLOT` reproduces the displayed results on a peripheral, vector-type plotter, when it is connected to the display HP-IB port.
- `REPORT ERRORS` lists the code and description of any operation or hardware error, and lists the name and HP-MSIB address of the module that produced the error. To display measurement results again, press (MENU) or (USER). See Appendix D for error-code descriptions.
- `display tests` accesses display diagnostics and identifies the display firmware (ROM version). Press `display tests`, `DISPLAY ID` to view the display firmware version and dot-generator release number.
- `INTEN ADJUST` adjusts the intensity of the display. Press the key, then turn the knob to vary intensity.

The color of the elements of the analyzer display, such as the graticule or the annotation, can be varied by pressing any of the following keys. Press (DISPLAY), `adjust color`, `edit color` to access them.

- `BACKGROUND`
- `GRATICULE`
- `TRACE A`
- `TRACE B`
- `TRACE C`
- `LINES` (for limit lines)
- `TITLE/ACTIVE`
- `ANNOTATION`
- `ADVISE` (for advisory messages)
- `ERRORS` (error messages)

- MARKERS
- KEY LABELS

The above softkeys access the following color-editing softkeys, depending on the setting of HSL/RGB. The *HP 70004A Color Display User's Guide* describes their operation.

- HUE
- SATURATION
- LUMINOSITY
- RED
- BLUE
- GREEN

Accessing Custom, User-Defined Functions

Unique functions can be stored in internal memory with computer programs or `ENTER COMMAND`. Functions and personalities can also be loaded from the memory card into internal memory. To view functions stored in internal memory, press

`MENU`

`Misc`

`MORE`

`execute DLP` (execute "down-loadable" program)

Stored functions are listed along the right side of the display. Press the softkeys to execute each function.

Accessing the Memory Card

Memory cards are available for external memory when the analyzer is installed in the HP 70004A color display or connected to it via HP-MSIB.

Insert the card with the arrow facing up into the slot. When correctly installed, a portion of the card (2 cm) is exposed. Improper insertion can produce error messages.

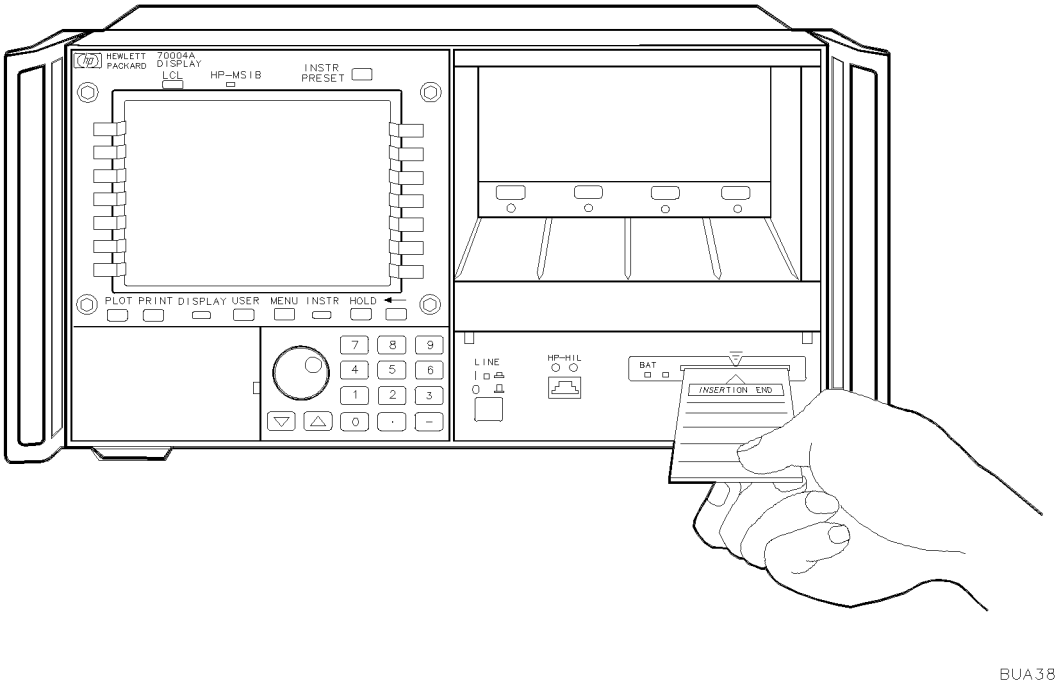

Figure 1-12. Inserting the Memory Card

The memory card requires power. Items stored in the memory card remain as long as the card has sufficient power. The HP 70004A color display provides power to the card when it is installed. The HP 70004A color display supplies power to the memory card only when the display is turned on. When the card is removed or the display is turned off, power is supplied by a battery within the memory card.

Change the memory-card battery every two years. On new cards, the time of installation is engraved on the side of the card. The first digit refers to the year. The next two characters refer to the month, and the last digit refers to the week. For example, 3OC3 indicates the battery was installed during the third week of October in 1993.

To change the battery, follow this procedure:

1. Install the memory card into the HP 70004A color display.
2. Locate the groove of the battery clip at the front edge of the card.
3. Gently pry the battery clip out of the card. The battery fits inside the clip.
4. Replace the battery, making sure the plus (+) sign on the battery is on the same side as the plus sign on the clip.
5. Insert the battery clip into the memory card, holding the clip as oriented in the following figure. (Face the open edge of the clip toward the write-protect switch on the memory card.)

6. Write the date that the battery was replaced on the memory-card label, to remind you when the battery should be replaced.

CAUTION Memory cards must be installed in an HP 70004A color display when the battery is removed. Be sure the display is turned on before removing the battery. If the battery is removed while the card is not installed in the display, all data in the memory card is lost. Store memory-card files on another device before changing the battery, when extra care is appropriate.

Formatting a Memory Card

New memory cards need to be formatted before use. Use the `FORMAT` softkey to format new memory cards with the logical-interchange-file (LIF) format. `FORMAT` can also be used to format used memory cards, but note that the *formatting process destroys all stored data*.

Follow this procedure:

1. Insert the memory card.
2. Specify the location of the memory card. If the card is in the HP 70004A color display, press `Misc`, `MORE`, `HP-MSIB CARD`. If the card is in another HP-MSIB device, press `Misc`, `MORE`, `HP-MSIB CARD`, then enter its HP-MSIB address (that is, the column address + row address × 32).
3. Press `FORMAT`

CAUTION `FORMAT` erases the contents of the currently selected memory. Be sure to select the desired memory before executing `FORMAT`. Internal memory is selected automatically when power is applied.

2

Softkey Menu Maps

The following softkey menus are accessed by pressing the (MENU) key and then pressing the softkeys located along the left side of the display. The menu softkeys are displayed as separate menu pages. Press the MORE softkeys to access additional menu pages.

Table 2-1 summarizes the functions accessed by each of the top-level (MENU) keys.

Table 2-1. Function Categories Accessed by Top-Level Keys

Top-Level Menu Softkeys	Instrument Function Categories
Freq	Frequency selection, Preselector, Signal identification
Amptd	Amplitude selection, Calibration, Lightwave mode, Power meter
Marker	Lightwave markers, Marker annotation, Marker positioning, Measurement range adjustment, Marker utility
BW,Swp	Bandwidth selection, Sweep and trigger selection, Trace processing
Traces	Instrument state, Memory, Signal detection, Trace processing
State	External mixer, Instrument state, Memory, Preamplifier, Preselector, Signal path selection, Tracking generator and source
Misc	Amplitude correction, Display, Limit lines, Memory, Programming, Service, User definition

The softkey menu illustrations in this chapter are arranged in the same sequence as the softkeys on the left side of the display, reading from the top softkey to the bottom softkey.

Freq Softkey Menu

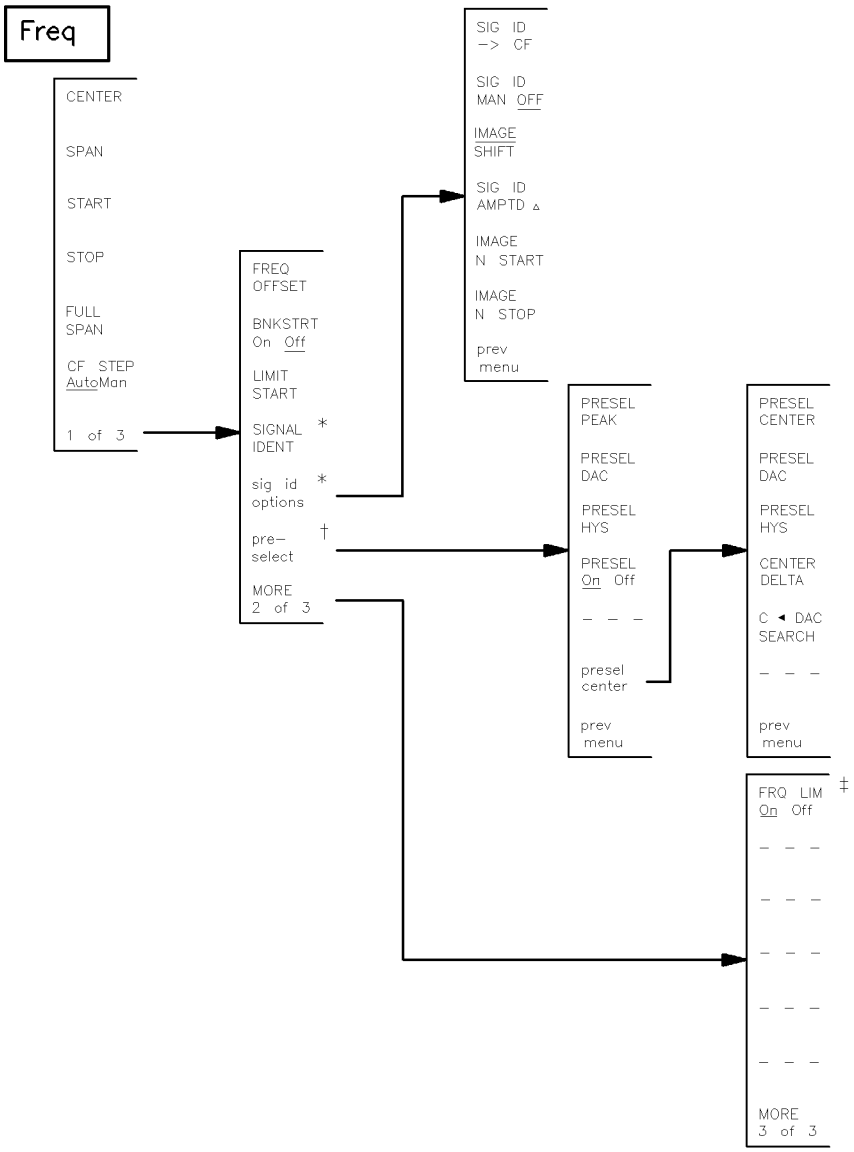

mmfreq

* Softkey is absent when a lightwave signal path (LW) for an HP 70810B lightwave section is selected from the select input softkey menu. See the State softkey menu map.

† Softkey is present only if the system includes a module with preselector capabilities.

‡ Softkey is present only if an HP 70908A RF section is installed in the system.

Figure 2-1. Freq Softkey Menu Map

Amptd Softkey Menu

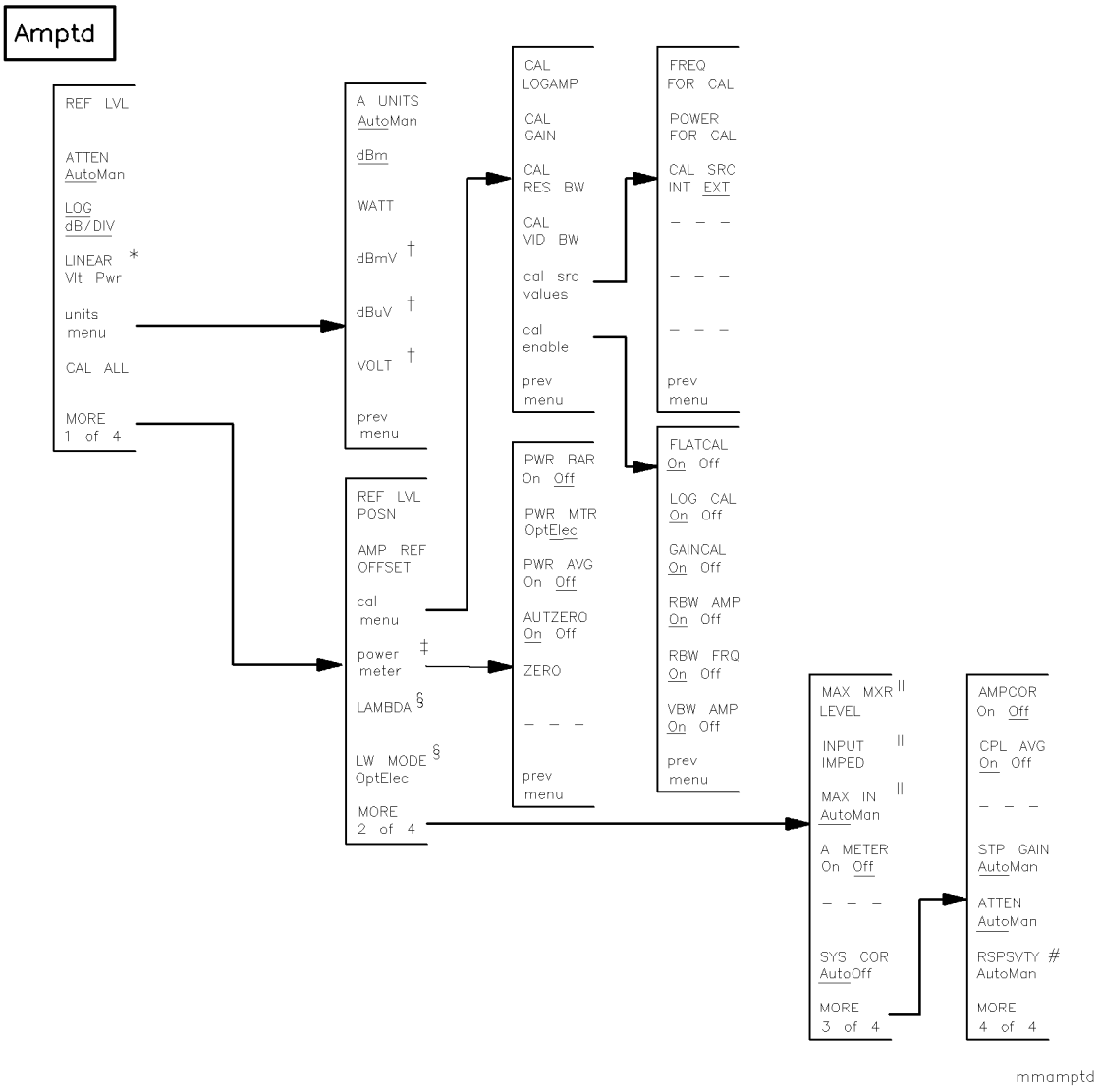

* LINEAR Vlt Pwr is replaced by the LINEAR softkey when the optical mode for a lightwave signal path (LW) is selected with the LW MODE OptElec softkey.

† Softkey is deleted when the optical mode for a lightwave signal path (LW) is selected with the LW MODE OptElec softkey.

‡ Softkey is present only if the system includes a module with power meter capabilities, such as the HP 70810B lightwave section.

§ Softkey is present when a lightwave signal path (LW) is selected from the select input softkey menu. See the State softkey menu map.

|| Softkey is absent when a lightwave signal path (LW) is selected from the select input softkey menu. See the State softkey menu map.

\# Softkey is present when the electrical mode for a lightwave signal path (LW) is selected with the LW MODE OptElec softkey.

Figure 2-2. Amptd Softkey Menu Map

Marker Softkey Menu

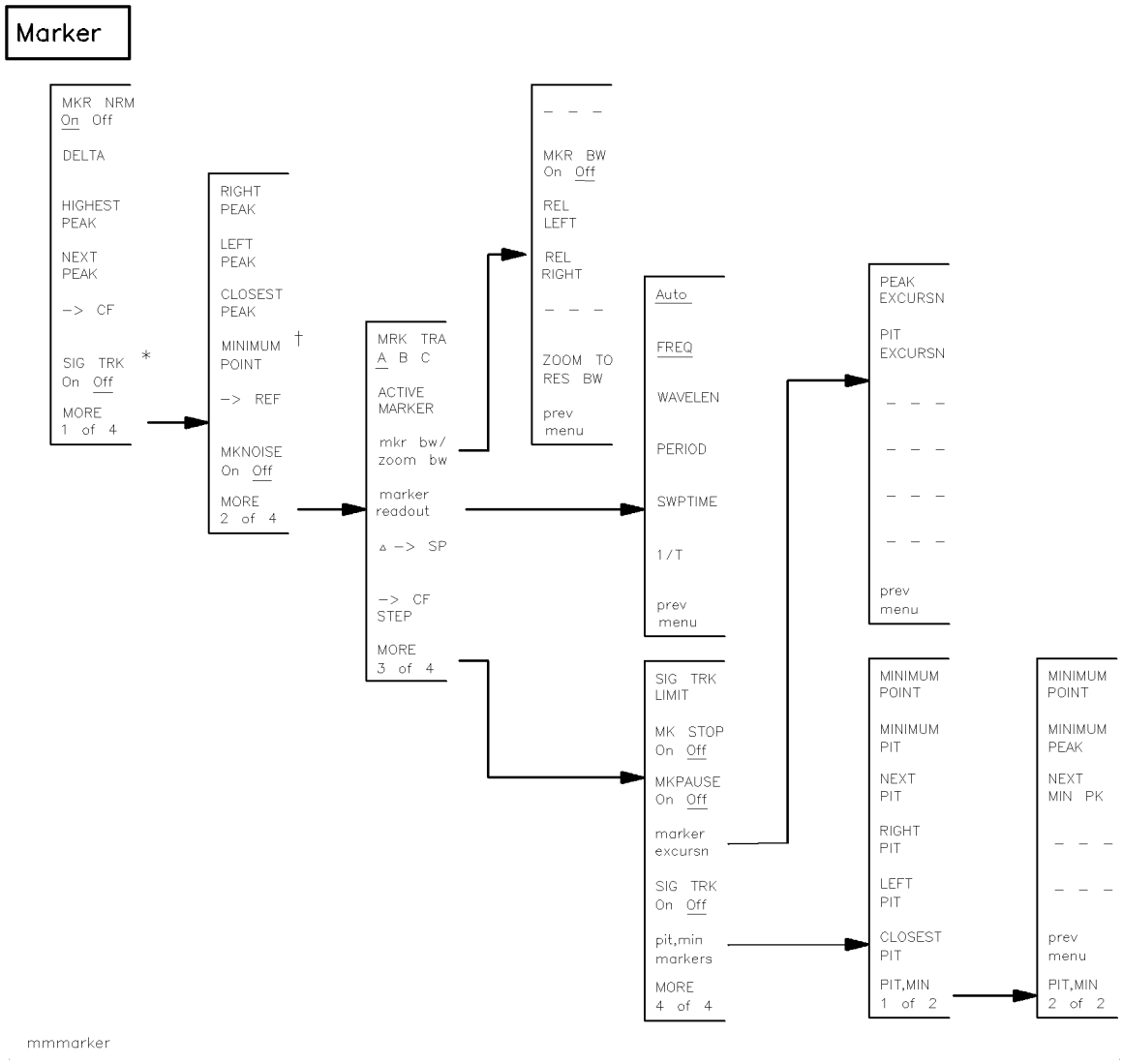

* SIG TRK On Off is replaced by RIN SYS On Off when a lightwave signal path (LW) is selected from the select input softkey menu. See the State softkey menu map.

† MINIMUM POINT is replaced by REL PWR On Off when a lightwave signal path (LW) is selected from the select input softkey menu. See the State softkey menu map.

Figure 2-3. Marker Softkey Menu Map

BW,Swp Softkey Menu

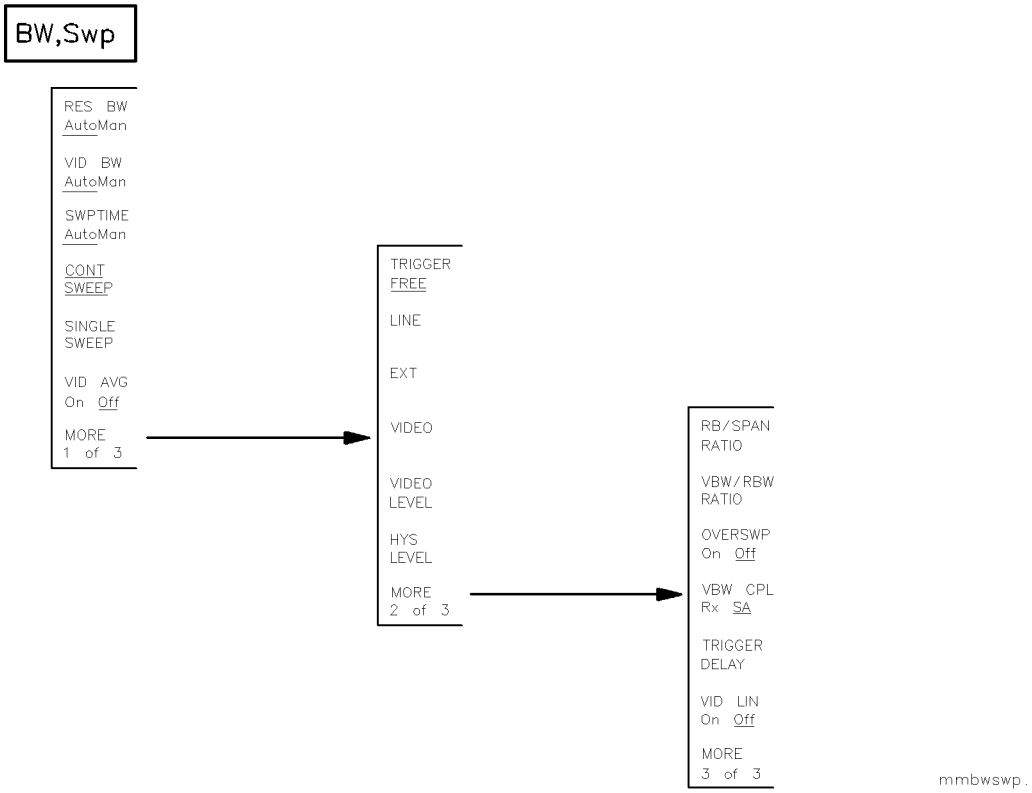

Figure 2-4. BW,Swp Softkey Menu Map

Traces Softkey Menu

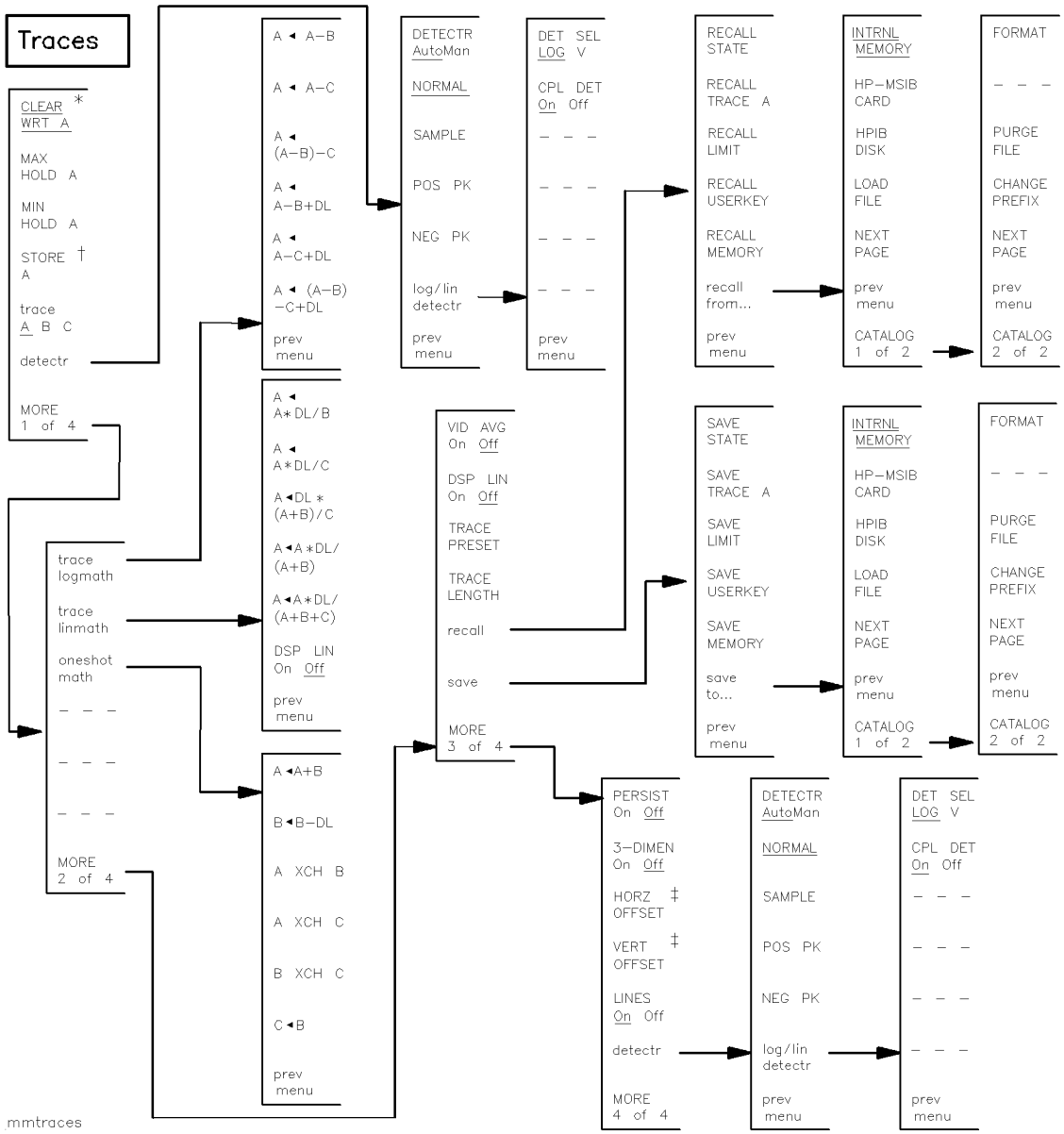

* If the VIEW A BLANK A softkey is present, press CLEAR WRT A to return the STORE A softkey.

† STORE A softkey is replaced by VIEW A BLANK A when STORE A is pressed.

‡ These softkeys are only available after pressing 3-DIMEN On Off.

Figure 2-5. Traces Softkey Menu Map

State Softkey Menu

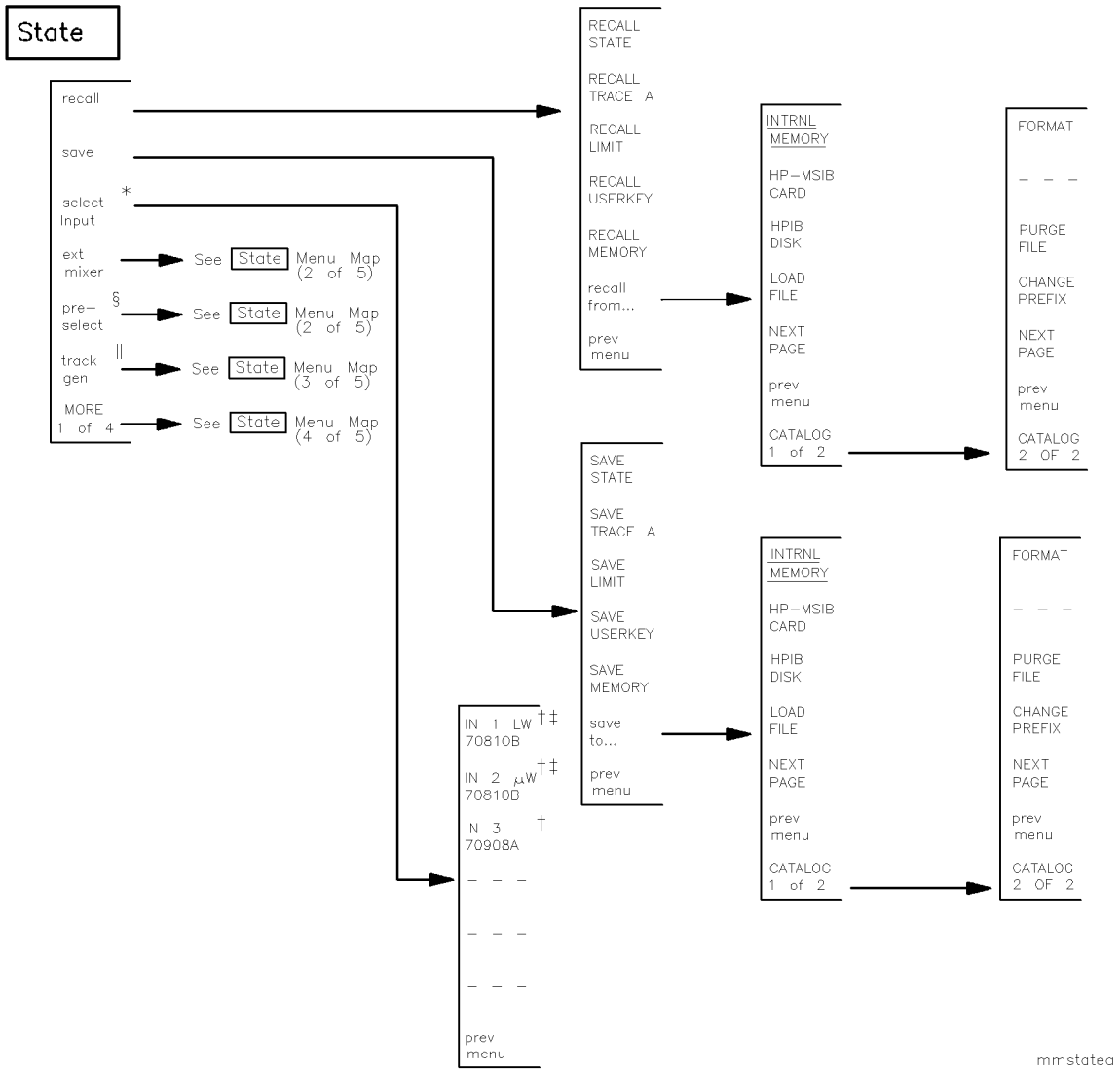

* The softkey is present only if there are multiple input signal paths available. The number of signal path inputs displayed after pressing the softkey is dependent on the number of RF and lightwave modules installed in the system.

† The model number for each module is displayed below the input signal designation. The menu illustrates the input signal modules from a HP 71400C lightwave signal analyzer.

‡ Two inputs are displayed for each HP 70810B lightwave section that is installed in the system. The μW input is displayed below the lightwave (LW) input. When an HP 70910A RF section is in the system, the softkeys IN 1 LW 70810B and IN 2 μW 70810B are replaced by IN 1 RF 70910A and IN 2 EM 70910A.

§ Softkey is present only if the system includes a module with preselector capabilities.

|| Softkey is present only if the system includes a module with tracking generator capabilities.

Figure 2-6. State Softkey Menu Map (1 of 5)

State Softkey Menu

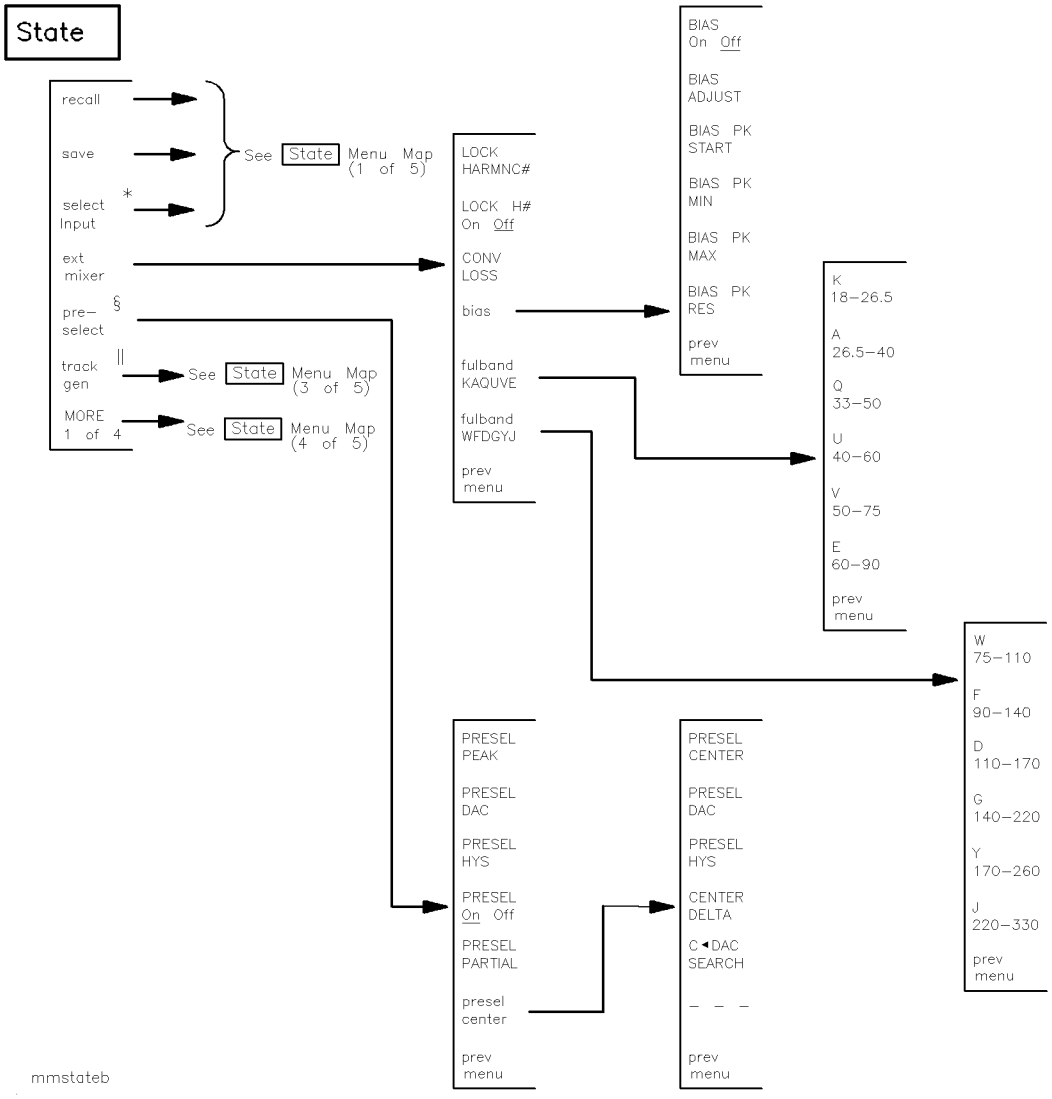

* The softkey is present only if there are multiple input signal paths available. The number of signal path inputs displayed after pressing the softkey is dependent on the number of RF and lightwave modules installed in the system.

§ Softkey is present only if the system includes a module with preselector capabilities.

|| Softkey is present only if the system includes a module with tracking generator capabilities.

Figure 2-7. State Softkey Menu Map (2 of 5)

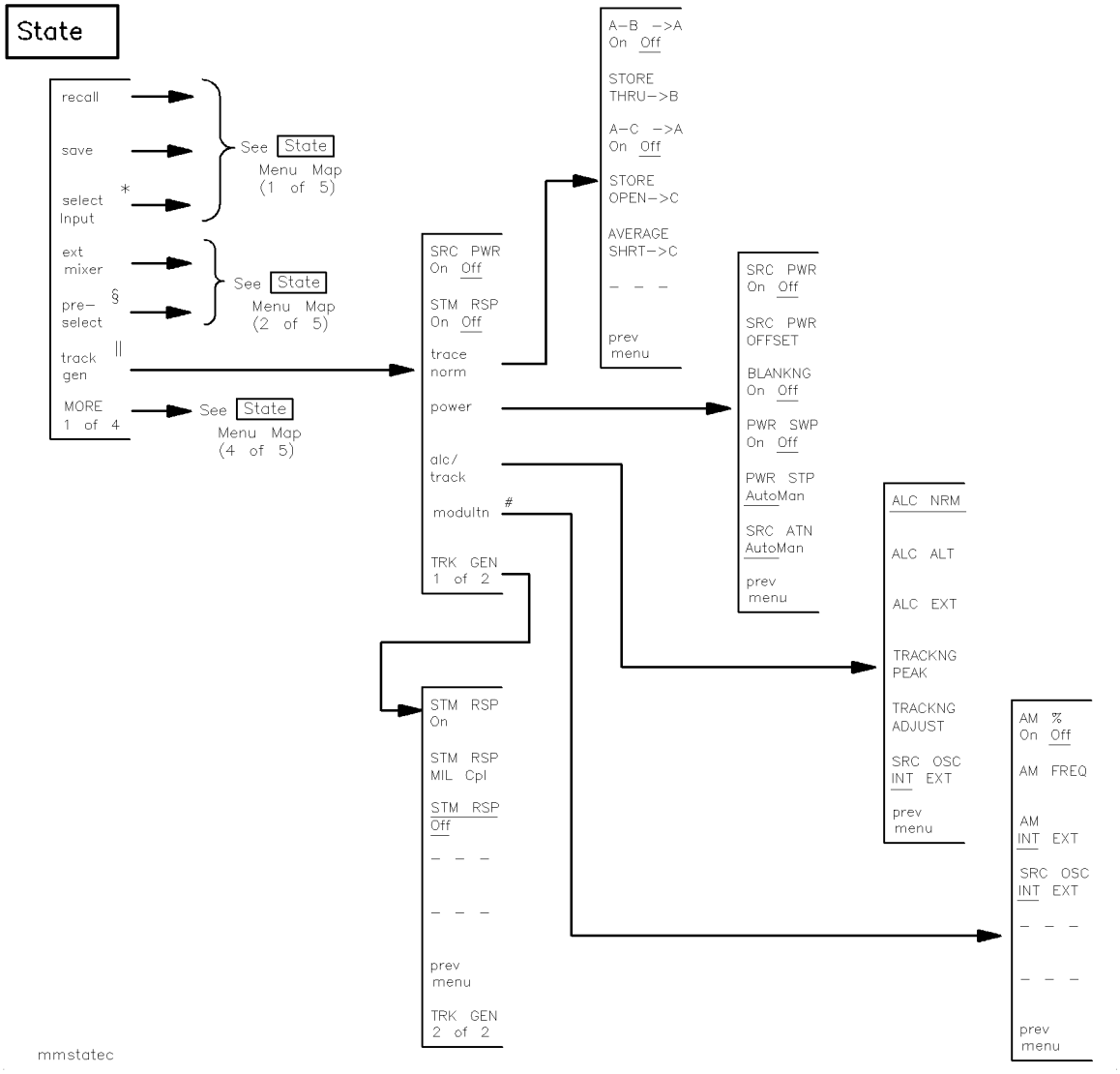

* The softkey is present only if there are multiple input signal paths available. The number of signal path inputs displayed after pressing the softkey is dependent on the number of RF and lightwave modules installed in the system.

§ Softkey is present only if the system includes a module with preselector capabilities.

|| Softkey is present only if the system includes a module with tracking generator capabilities.

\# Softkey is present only if the system includes a tracking generator module with modulation capabilities.

Figure 2-8. State Softkey Menu Map (3 of 5)

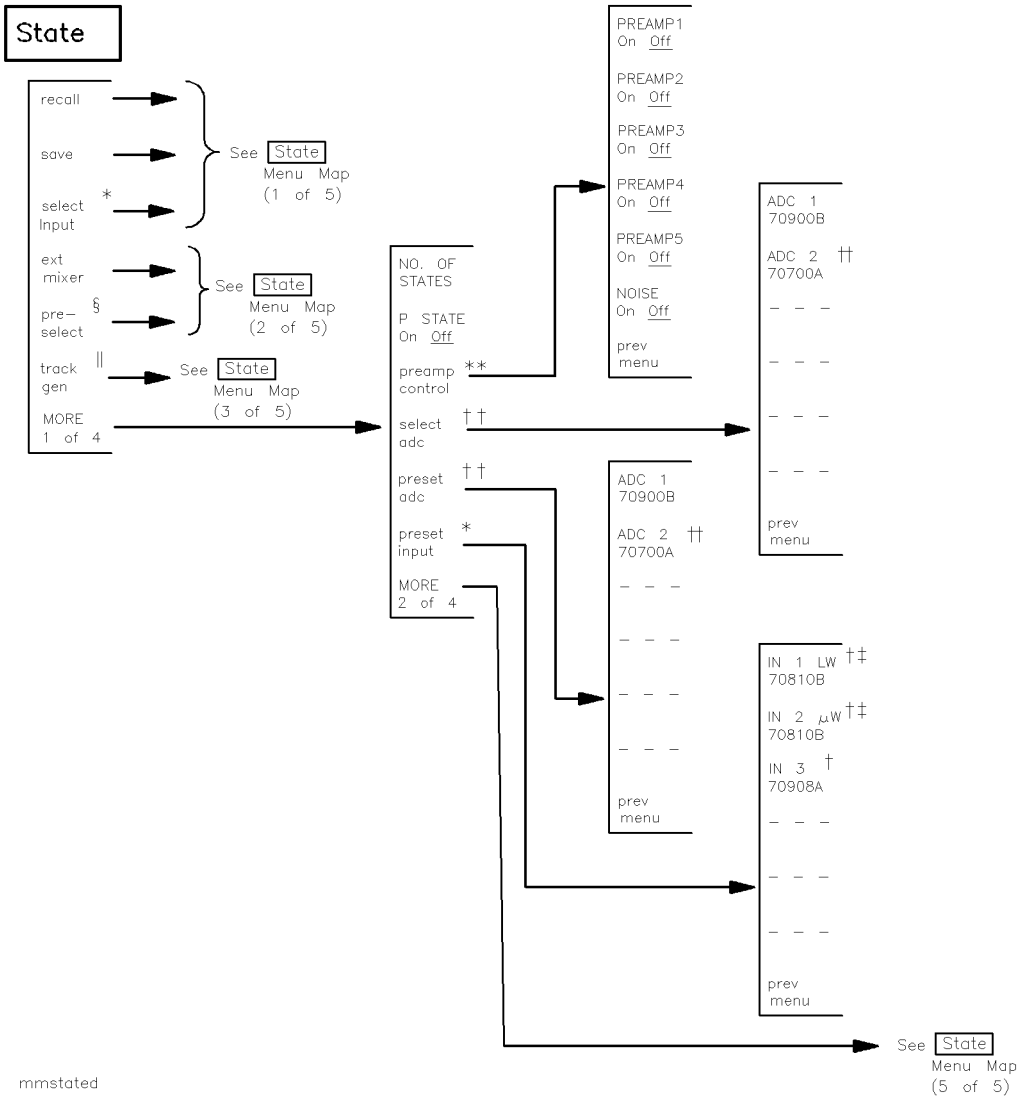

*	The softkey is present only if there are multiple input signal paths available. The number of signal path inputs displayed after pressing the softkey is dependent on the number of RF and lightwave modules installed in the system.
†	The model number for each module is displayed below the input signal designation. The menu illustrates the input signal modules from a HP 71400C lightwave signal analyzer system.
‡	Two inputs are displayed for each HP 70810B lightwave section that is installed in the system. The μW input is displayed below the lightwave (LW) input. When an HP 70910A RF section is in the system, the softkeys IN 1 LW 70810B and IN 2 μW 70810B are replaced by IN 1 RF 70910A and IN 2 EM 70910A.
§	Softkey is present only if the system includes a module with preselector capabilities.
‖	Softkey is present only if the system includes a module with tracking generator capabilities.
**	Softkey is present only if the system includes a preamplifier module.
††	Softkey is present only if the system includes an HP 70700A digitizer.
‡‡	Softkey is present only if an HP 70908A RF section is installed in the system.

Figure 2-9. State Softkey Menu Map (4 of 5)

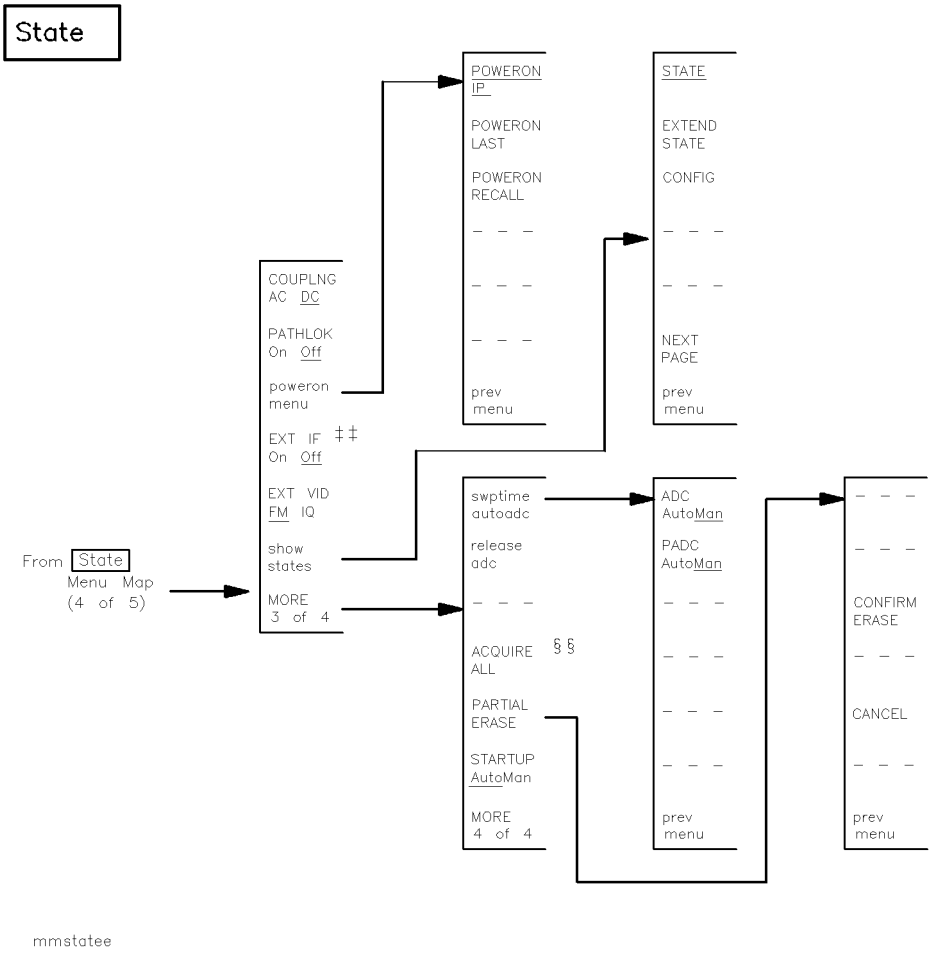

‡‡ Softkey is present only if an HP 70908A RF section is installed in the system.

§§ Pressing this softkey causes all display links to be broken. To establish new display links, press DISPLAY and NEXT INSTR.

Figure 2-10. State Softkey Menu Map (5 of 5)

Misc Softkey Menu

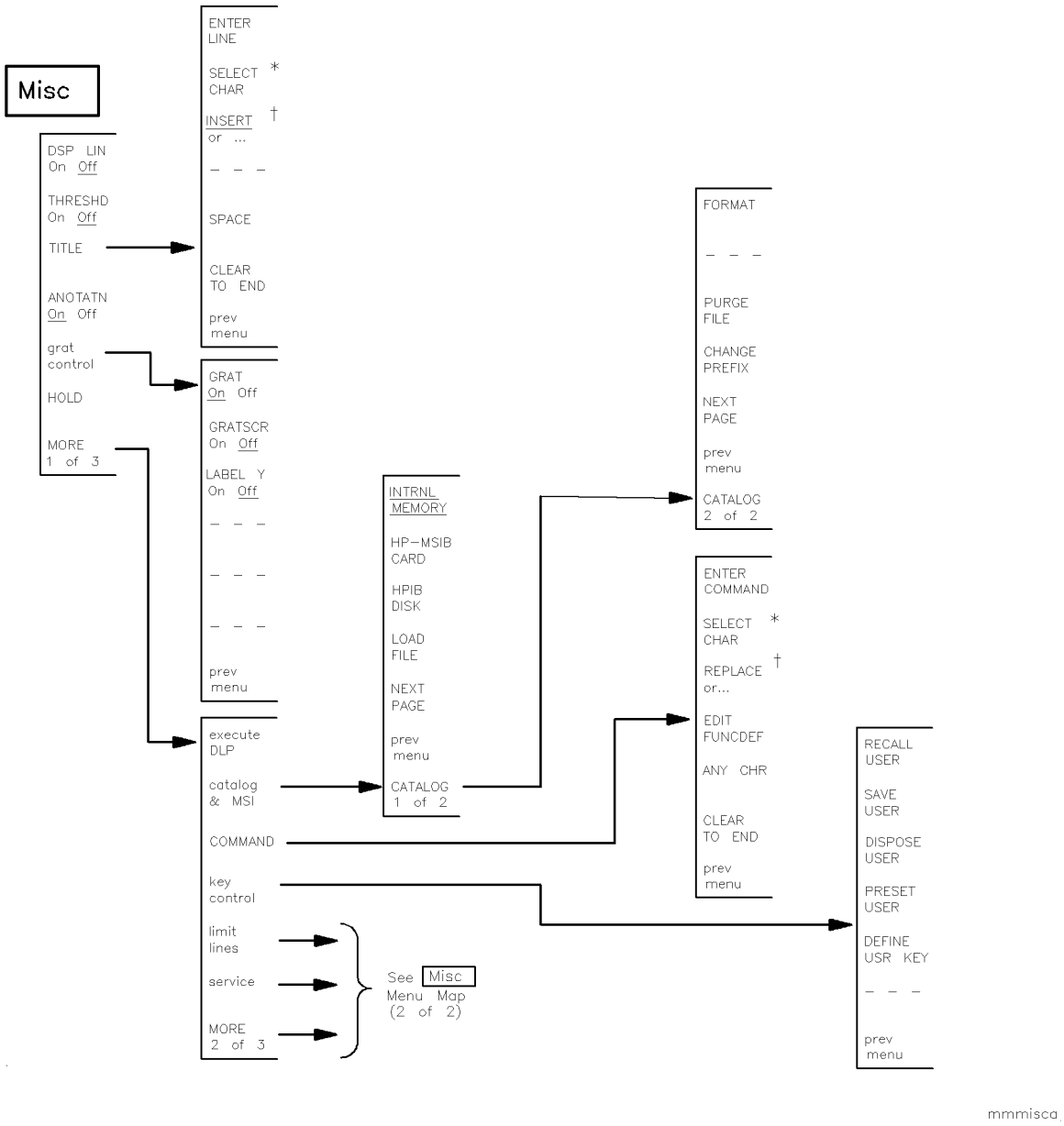

* When DELETE or... softkey is present, SELECT CHAR is replaced by DELETE CHAR.

† Pressing softkey provides a sequence of three editing functions. Press REPLACE or... to access the insert editing function. Press INSERT or... to access the delete editing function. Press DELETE or... to access the replacement editing function.

Figure 2-11. Misc Softkey Menu Map (1 of 2)

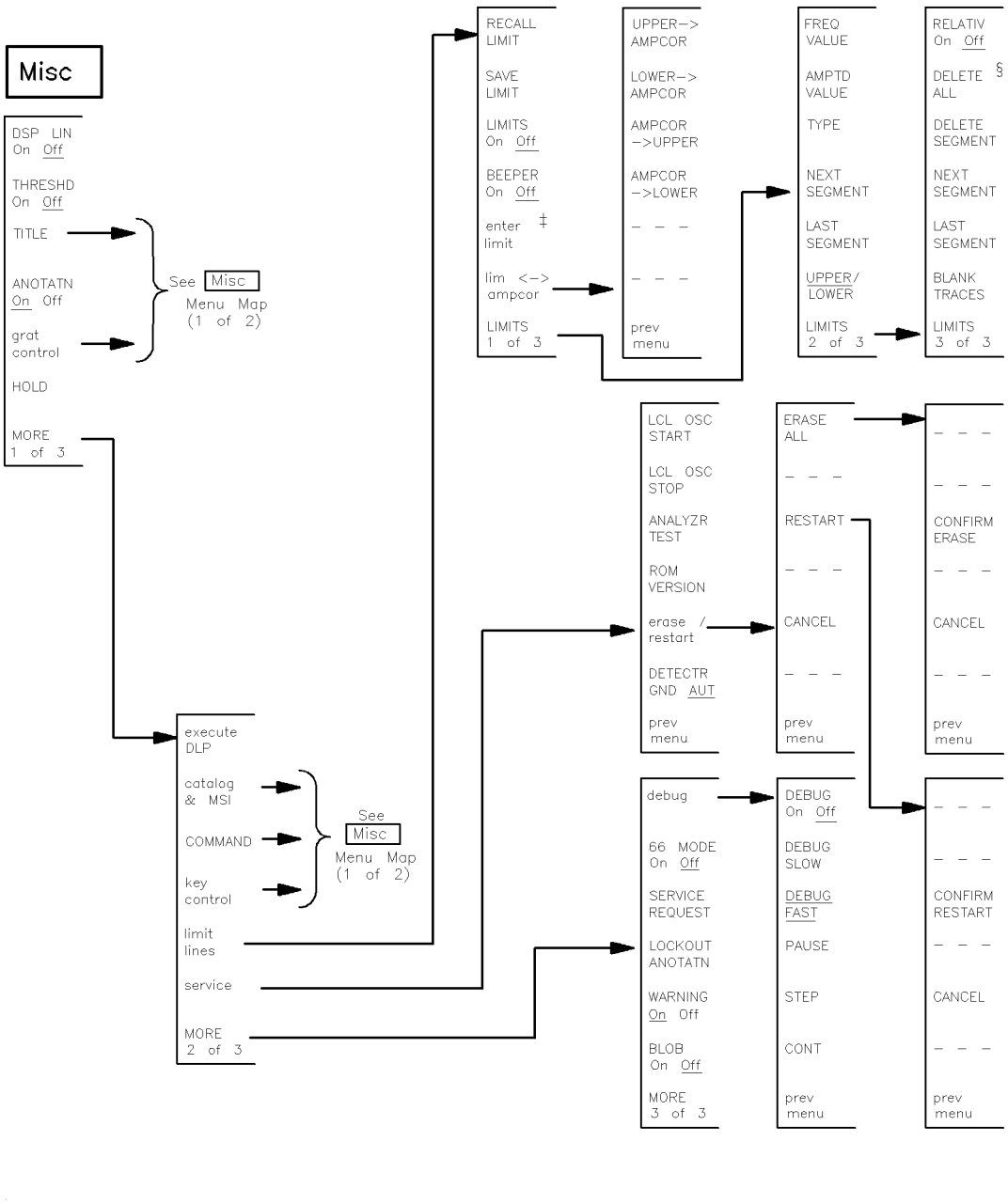

‡ If a limit value is entered, enter limit is replaced by edit limit.

§ Press DELETE ALL to return to the enter limit softkey.

Figure 2-12. Misc Softkey Menu Map (2 of 2)

3

SoftKey Quick Reference

The following tables show the softkeys that can be accessed by each of the seven top-level softkeys that appear on the left side of the display when (MENU) is pressed.

Generally, a softkey that is displayed in inverse video indicates that the function is enabled. When an active function is enabled, it is always displayed in inverse video. The use of an underline within a softkey display indicates that a specific functional state for the softkey is selected.

Refer to “Functional Grouping Definitions” for detailed descriptions of each functional grouping in the following tables.

Table 3-1. SoftKey Quick Reference, Organized by Function

Menu Key	Definition
Active-Trace Processing Functions	
3-DIMEN On Off	Turn on or off the three-dimensional trace display capability.
A XCH B	Exchanges the contents of the trace A and B registers.
A XCH C	Exchanges the contents of the trace A and C registers.
A◀(A–B)–C+DL	Performs trace math (A–B)–C+DL▶A with each sweep.
A◀(A–B)–C	Performs trace math (A–B)–C▶A with each sweep.
A◀A–B+DL	Performs trace math A–B+DL▶A with each sweep.
A◀A–B	Performs trace math A–B▶A with each sweep.
A◀A–C+DL	Performs trace math (A–C)+DL▶A with each sweep.
A◀A–C	Performs trace math A–C▶A with each sweep.
A◀A*DL/(A+B)	Performs trace math A*DL/(A+B)▶A with each sweep.
A◀A*DL/(A+B+C)	Performs trace math A*DL/(A+B+C)▶A with each sweep.
A◀A*DL/B)	Performs trace math A*DL/B▶A with each sweep.
A◀A*DL/C)	Performs trace math A*DL/C▶A with each sweep.
A◀DL*(A+B)/C)	Performs trace math DL*(A+B)/C▶A with each sweep.
A-B+DL On Off	Subtracts trace B from trace A point by point, adds the value of the display line, and then stores the results in trace A.
A-B->A On Off	Subtracts trace B from trace A point by point, then stores the results in trace A.
A<-A+B	Adds traces A and B point by point, then stores the results in trace A.
B XCH C	Exchanges the contents of the trace B and C registers.
B<-B-DL	Subtracts the value of the display line from trace B, then stores the result in trace B.
C<-B	Stores the results of trace B in trace C.
CLEAR WRT A	Continuously displays any signals detected at the spectrum analyzer input for the related trace.
CLEAR WRT B	Continuously displays any signals detected at the spectrum analyzer input for the related trace.
CLEAR WRT C	Continuously displays any signals detected at the spectrum analyzer input for the related trace.
HORZ OFFSET	Select the horizontal offset of the three-dimensional trace display.
LINES On Off	Changes the appearance of displayed trace information.

Table 3-1. SoftKey Quick Reference, Organized by Function (continued)

Menu Key	Definition
Active-Trace Processing Functions — Continued	
`MAX HOLD A`	Compares the current amplitude value of each point on a trace to each corresponding value detected during the previous sweep, then retains the maximum values.
`MIN HOLD A`	Compares the current amplitude value of each point on a trace to each corresponding value detected during the previous sweep, then retains the minimum values.
`PERSIST On Off`	Simulates analog displays by changing the appearance of displayed trace information.
`STORE A`	Stops the updating of the Trace A, stores the trace data in reserved memory, then activates the `VIEW A/BLANK A` softkey.
`TRACE LENGTH`	Varies the number of points in a trace from 3 to 1024.
`VERT OFFSET`	Select the vertical offset of the three-dimensional trace display.
`VID AVG On Off`	Executes a digital-averaging routine that reduces the noise-floor level, but does not affect the sweep time, bandwidth, or any other analog characteristic of the analyzer.
`VIEW A BLANK A`	Selects two functions. When set to view, stored trace data is displayed. When set to blank, stored trace data is blanked from the display, but remains in reserved memory. Trace B and Trace C have a corresponding view and blank softkey function.
`oneshot math`	Accesses oneshot math active-trace processing function softkeys.
`trace A B C`	Selects the active trace for the trace-processing functions.
`trace linmath`	Accesses linear math active-trace processing function softkeys.
`trace logmath`	Accesses log math active-trace processing function softkeys.

Table 3-1. SoftKey Quick Reference, Organized by Function (continued)

Menu Key	Definition
Amplitude Functions	
A METER On Off	Enables readout of currently updated trace point.
A UNITS AutoMan	Selects default amplitude units.
AMP REF OFFSET	Allows the displayed power level to be adjusted, using a relative-amplitude offset value, specified by the user.
AMPCOR On Off	Applies amplitude correction at specified frequencies.
ATTEN AutoMan	Varies either RF input attenuation or optical input attenuation.
CPL AVG On Off	Controls the coupling between VAVG and PWRAVG.
INPUT IMPED	Specifies the value of input impedance expected at the active input port.
LINEAR Vlt Pwr	Places the analyzer in linear mode, scaling the graticule in linear units proportional to the input voltage or input power.
LINEAR	Places the analyzer in linear power mode, scaling the graticule in linear units proportional to the input power.
LOG dB/DIV	Scales the graticule in logarithmic units from 0.01 to 20 dB per division.
MAX IN AutoMan	Specifies the maximum expected signal level to the spectrum analyzer input during a given measurement procedure.
MAX MXR LEVEL	Specifies the maximum signal level at the mixer input.
REF LVL POSN	Repositions the reference level on any of the major graticule lines during logarithmic mode.
REF LVL	Specifies the absolute-amplitude value of the graticule.
STP GAIN AutoMan	Controls the first step gain in the signal path.
VOLT	Allows the amplitude readout annotation for the reference level, marker, display line, and threshold to be changed to volts.
WATT	Allows the amplitude readout annotation for the reference level, marker, display line, and threshold to be changed to WATTs.
dBμV	Allows the amplitude readout annotation for the reference level, marker, display line, and threshold to be changed to dBμV.
dBmV	Allows the amplitude readout annotation for the reference level, marker, display line, and threshold to be changed to dBmV.
dBm	Allows the amplitude readout annotation for the reference level, marker, display line, and threshold to be changed to dBm.
units menu	Provides an amplitude readout selection menu.

Table 3-1. SoftKey Quick Reference, Organized by Function (continued)

Menu Key	Definition
Amplitude-Correction Functions	
AMPCOR -> LOWER	Stores amplitude correction values as a lower limit line.
AMPCOR -> UPPER	Stores amplitude correction values as a upper limit line.
LOWER-> AMPCOR	Stores a lower-limit line as amplitude correction values for a specific frequency range.
UPPER-> AMPCOR	Stores an upper limit-line as amplitude correction values for a specific frequency range.
lim <-> ampcor	Accesses the softkeys that allow modification of user-defined amplitude-correction values, using the limit-line functions.
Bandwidth Functions	
RB/SPAN RATIO	Specifies the ratio between the resolution bandwidth and span settings.
RES BW AutoMan	Specifies the width of the resolution bandwidth filter and controls the coupling between the resolution bandwidth and span settings.
TRIGGER DELAY	Controls the trigger delay or pre-trigger for the currently selected ADC.
VBW CPL Rx SA	Controls the value of the receiver mode flag.
VBW/RBW RATIO	Specifies the ratio between the video and resolution bandwidths that is maintained when their settings are coupled.
VID BW AutoMan	Specifies the width of the video-bandwidth filter and controls the coupling between the resolution bandwidth and video-bandwidth filter settings.
VID LIN On Off	Controls the video trigger display lines.

Table 3-1. SoftKey Quick Reference, Organized by Function (continued)

Menu Key	Definition
Calibration Functions	
CAL ALL	Executes a calibration routine that applies all correction factors.
CAL GAIN	Corrects errors in the step gain amplifiers in the IF section and the attenuator in the RF or preselector section.
CAL LOGAMP	Corrects errors in the logarithmic amplifiers in the IF section.
CAL RES BW	Corrects amplitude and frequency anomalies in the resolution bandwidth filters in the IF section.
CAL SRC INT EXT	Switches between an internal or external calibration reference.
CAL VID BW	Corrects amplitude and frequency anomalies in the video bandwidth filters in the IF section.
FLATCAL On Off	Disables the correction factors that compensate for frequency-dependent gain variations in the RF section.
FREQ FOR CAL	Specifies the frequency of the calibration reference.
GAINCAL On Off	Disables the correction factors that compensate for errors in the attenuator.
LOG CAL On Off	Disables the correction factors that compensate for logarithm-amplifier errors in the IF section.
POWER FOR CAL	Specifies the power of the calibration reference.
RBW AMP On Off	Disables the amplitude-correction factors to the local oscillator.
RBW FREQ On Off	Disables the frequency-correction factors to the local oscillator.
SYS COR AutoOff	Enables system specific amplitude-correction factors.
VBW AMP On Off	Disables the amplitude-correction factors to the local oscillator.
cal enable	Accesses softkeys that control the usage of the system correction factors.
cal menu	Accesses the system calibration softkeys.
cal src values	Accesses the internal or external calibration source softkeys.

Table 3-1. SoftKey Quick Reference, Organized by Function (continued)

Menu Key	Definition
Display Functions	
`ANOTATN On Off`	Turns the displayed annotation on and off.
`DSP LIN On Off`	Positions a horizontal line, called a display line, anywhere on the graticule.
`ENTER LINE`	Enters the text created by the user in the "TITLE" entry window into the title display line at the top of the display.
`GRAT On Off`	Turns the graticule on and off.
`GRATSCR On Off`	Controls the positioning of the displayed horizontal graticule lines.
`HOLD`	Blanks the active function readout and disables the numeric keypad, knob, and step keys until another analyzer function is activated.
`LABEL Y On Off`	Controls the display of annotation for the horizontal graticule.
`LOCKOUT ANOTATN`	Turns the displayed annotation off.
`THRESHD On Off`	Blanks all displayed trace information below an amplitude threshold level without altering stored trace data.
`TITLE`	Accesses a set of editing-function softkeys that display a message in the title line.
`grat control`	Accesses the graticule control softkey functions.

Table 3-1. SoftKey Quick Reference, Organized by Function (continued)

Menu Key	Definition
External-Mixer Functions	
`BIAS ADJUST`	Activates a bias current that is specified with the numeric keypad.
`BIAS On Off`	Activates the softkey functions that control the bias current.
`BIAS PK MAX`	Sets the highest possible bias current available to the `BIAS PK START` softkey.
`BIAS PK MIN`	Sets the lowest possible bias current available to the `BIAS PK START` softkey.
`BIAS PK RES`	Determines the number of possible bias currents that are available within a specified range.
`BIAS PK START`	Peaks the conversion gain for the signal marked by the active marker.
`CONV LOSS`	Offsets the reference level to compensate for amplitude losses at the active input port.
`LOCK H# On Off`	Turns the lock harmonic number function on and off.
`LOCK HARMNC#`	Limits the frequency range to the frequency band that corresponds to the harmonic number, as shown in Table 4-3.
`bias`	Accesses bias adjustment softkeys for an external mixer.
`ext mixer`	Accesses the external-mixer softkey functions.
`fulband KAQUVE`	Specifies the frequency range for measurements made with external mixers.
`fulband WFDGYJ`	Specifies the frequency range for measurements made with external mixers.

Table 3-1. SoftKey Quick Reference, Organized by Function (continued)

Menu Key	Definition
Frequency Functions	
BNKSTRT On Off	Blanks all displayed trace information for frequencies prior to a calculated frequency point.
CENTER	Specifies the center frequency.
CF STEP AutoMan	Is used with the ▲ and ▼ step keys to change the center frequency by increments called steps.
FREQ OFFSET	Offsets the value of absolute frequency annotation.
FRQ LIM On Off	Enables measurements beyond 22 GHz.
FULL SPAN	Sets the measurement range to the maximum frequency range of the system.
LIMIT START	Disables the blank start function and sets the start frequency to either a value eight times the resolution bandwidth or 100 kHz, whichever is greater.
SPAN	Changes the analyzer measurement range symmetrically about the center frequency.
START	Sets the start frequency.
STOP	Sets the stop frequency.
Instrument-State Functions	
CONFIG	Describes the placement of each module in the system by column and row number.
EXTEND STATE	Lists module-level parameters and current values for each module of the instrument.
NEXT PAGE	Provides view of next page of information.
NO. OF STATES	Adds or deletes state-register files and their contents from user memory.
P STATE On Off	Protects the contents of all state-register files.
POWERON IP LAST	Specifies the instrument state when the instrument is turned on.
RECALL STATE	Reconfigures the analyzer into a state that has been saved in a state-register file.
STATE	Lists the current state of system-level parameters under operator control.
TRACE PRESET	Resets the trace functions to a known state without affecting the analyzer measurement range.
preset adc	Specifies whether internal or external analog-to-digital processing is active after instrument preset is executed.
preset input	Determines which input port is active after instrument preset is executed.
show states	Accesses the softkeys that provide the current instrument-state information.

Table 3-1. SoftKey Quick Reference, Organized by Function (continued)

Menu Key	Definition
Lightwave Functions	
LAMBDA	Selects a calibrated wavelength for a lightwave signal analyzer.
LW MODE OptElec	Selects either optical units or electrical units for the signal trace when a lightwave signal path is selected.
RSPSVTY AutoMan	Allows manual entry of a responsivity value for the lightwave section.
Limit-Line Functions	
AMPTD VALUE	Moves the entry window in the limit-line table.
BEEPER On Off	Compares the amplitude values of the active trace to the parameters listed in the limit-line table.
BLANK TRACES	Stops the display of any active trace (trace A, B, or C).
CONFIRM DELETE	Erases the contents of the limit-line table after DELETE ALL has been pressed.
DELETE ALL	Erases the contents of the limit-line table and prepares it for new data entry.
DELETE SEGMENT	Erases the specified segment of the limit-line from the limit-line table.
FREQ VALUE	Moves the entry window in the limit-line table.
LAST SEGMENT	Moves the entry window to the next row in the limit-line table, and specifies that the parameters in that row constitute the last line segment in the limit line.
LIMITS On Off	Compares the amplitude values of the active trace to the parameters listed in the limit-line table.
NEXT SEGMENT	Moves the entry window to the next row in the limit-line table.
RELATIV On Off	Specifies whether the parameters in the limit-line table represent absolute amplitude and frequency values or are values relative to the reference-level and center-frequency settings.
TYPE	Moves the entry window in the limit-line table.
UPPER/LOWER	Specifies whether the parameters in the limit-line table are for the upper or lower limit-line.
edit limit	Displays the limit-line table, which lists limit-line parameters, and allows the displayed limit-line parameters to be edited.
enter limit	Allows a set of limit-line parameters to be defined by the user.

Table 3-1. SoftKey Quick Reference, Organized by Function (continued)

Menu Key	Definition
Marker Functions	
Δ -> SP	Sets the start and stop frequencies equal to the frequencies of the reference and active markers.
1/T	Describes the marker position in terms of the inverse of the marker sweep-time position.
-> CF STEP	Sets the center-frequency step size equal to the frequency difference between the reference and active markers.
-> CF	Sets the center frequency equal to the marker frequency.
-> REF	Sets the reference level equal to the marker amplitude.
ACTIVE MARKER	Selects a number from 1 to 5 for the active marker.
CLOSE PIT	Repositions the *active* marker on the trace and selects the closest pit.
CLOSEST PEAK	Repositions the *active* marker on the trace and selects the closest signal peak.
DELTA	Positions a second marker on a trace relative to the position of the active marker, called the reference marker.
FREQ	Describes marker position in terms of frequency.
HIGHEST PEAK	Moves the marker to the peak of the highest-level signal detected.
LEFT PEAK	Moves the marker to the closest signal peak of lower frequency.
LEFT PIT	Moves the displayed, active marker to the next signal peak (to the left).
MIN PIT	Selects the next lowest pit. This would be used to move up after using MKPIT.
MIN POINT	Moves the displayed marker to lowest signal level in trace.
MINIMUM PEAK	Moves the marker to the lowest detected peak level on the trace.
MINIMUM POINT	Moves the marker to the lowest detected level on the trace.
MK STOP On Off	Provides a sweep-to-marker function.
MKNOISE On Off	Displays the rms noise level at the marker position.
MKPAUSE On Off	Stops the sweep at the marker position from 0 to 1000 seconds.
MKR BW On Off	Displays the frequency difference between markers #3 and #2.
MKR NRM On Off	Places the active marker on a trace at the specified frequency, or during zero span mode, at the specified unit of time.
MRK TRA A B C	Specifies whether the active marker is positioned on trace A, B, or C.

Table 3-1. SoftKey Quick Reference, Organized by Function (continued)

Menu Key	Definition
Marker Functions — Continued	
NEXT MIN PK	Moves the marker to the next lowest detected peak level on the trace.
NEXT PEAK	Moves the marker to the signal peak of greatest amplitude that is less than the current marker amplitude.
NEXT PIT	Moves the marker to the signal peak of greatest amplitude that is greater than the current marker amplitude.
PEAK EXCURSN	Is used in conjunction with the marker-peaking functions when measuring low level signals.
PERIOD	Describes the position of the marker in terms of the period, where period equals 1/frequency.
PIT EXCURSN	Controls the excursion value for marker pit operations.
READ AutoMan	Is set to manual whenever the FREQ, PERIOD, SWPTIME, or 1/T softkeys are pressed.
REL LEFT	Activates marker #2 and positions it on a trace in the current amplitude terms, relative to the position of marker #1.
REL PWR On Off	Is a marker function that calculates the difference between the signal amplitude at the marker and the average optical power.
REL RIGHT	Activates marker #3 and positions it on a trace in the current amplitude terms, relative to the position of marker #1.
RIGHT PEAK	Moves the marker to the closest signal peak of higher frequency.
RIGHT PIT	Selects the next right pit.
RIN SYS On Off	Turns the RIN marker function on and off.
SIG TRK LIMIT	Use the tracking-limit function when tracking a signal that is close to another signal of similar amplitude.
SIG TRK On Off	Keeps the marker and the trace point it marks at the center of the display.
SWPTIME	Describes the marker position in terms of sweep time.
WAVELEN	Converts the displayed frequency to its related wavelength.
X	Used to specify the marker position in terms of a ratio after making a numeric entry.
ZOOM TO RES BW	Reduces the span to 0 Hz, then adjusts the resolution bandwidth to a value of your choosing.
marker excursn	Accesses marker peak and pit excursion softkey menu.
marker readout	Selects marker readout annotation.
mkr bw/zoom bw	Accesses the marker bandwidth and zoom bandwidth softkeys.
pit,min markers	Accessesthe marker pit operations softkey menu.

Table 3-1. SoftKey Quick Reference, Organized by Function (continued)

Menu Key	Definition
Memory-Related Functions	
CHANGE PREFIX	Allows the user to change the file prefix for files that are stored in memory.
CONFIRM ERASE	Erases memory when pressed.
FORMAT	Erases, then initializes the currently selected memory.
HP-MSIB CARD	Accesses various types of external memory that are available through an HP-MSIB device.
HPIB DISK	Selects external memory that is accessed on an HP-IB device.
INTRNL MEMORY	Selects internal memory in the analyzer, specifically in the HP 70900B local oscillator source.
LOAD FILE	Recalls any file stored in user memory, duplicating the operation of the recall softkeys.
PARTIAL ERASE	Erases all unprotected internal memory contents.
PURGE FILE	Erases files from internal or external memory.
RECALL LIMIT	Loads the contents of a limit-line file into the limit-line table, over-writing any existing table entries.
RECALL MEMORY	Loads the contents of a program file into internal memory or reserved memory.
RECALL TRACE A	Loads the contents of a trace file into trace A.
RECALL USERKEY	Clears the current menu of user-defined softkeys, then loads the contents of a user-key file into the user-key menu.
SAVE LIMIT	Stores the contents of the limit-line table in a limit-line file.
SAVE MEMORY	Stores all non-ASCII, internal-memory entries in a program file into external memory only.
SAVE STATE	Saves the current instrument state in a state-register file.
SAVE TRACE A	Stores trace A in a trace file.
SAVE USERKEY	Stores the current menu of user-defined softkeys in a user-key file.
recall from...	Accesses the softkey functions that select a memory device or modify existing files.
recall	Accesses the memory-retrieval softkey functions.
save to...	Accesses the softkey functions that select a memory device or modify existing files.
save	Accesses the memory-storage softkey functions.

Table 3-1. SoftKey Quick Reference, Organized by Function (continued)

Menu Key	Definition
Power-Meter Functions	
AUTZERO On Off	Selects automatic zeroing of offsets in the internal power meter of the lightwave section.
NOISE ON OFF	Provides an external-noise-source drive voltage for noise figure measurements.
PREAMP N On Off	Turns on a preamplifier.
PWR AVG On Off	Controls video averaging of the power meter value.
PWR BAR On Off	Turns on and off the display of the power bar at the left-hand side of the display screen and the average-power readout annotation.
PWR MTR OptElec	Selects either optical units or electrical units for power meter annotation.
USR PWR On Off	Allows the displayed optical power level for the trace and power meter to be adjusted, using a known optical input power level, specified by the user.
ZERO	Zeroes offsets in the internal average power meter.
power meter	Accesses the power meter softkey functions.
preamp control	Accesses the preamplifier control softkeys.
Preselector Functions	
C ◀ DAC SEARCH	Places the DAC search values into trace C.
CENTER DELTA	Adjusts the delta value for performing preselector centering.
PRESEL CENTER	Performs preselector centering.
PRESEL DAC	Enters a value into the preselector DAC for the frequency range corresponding to the frequency at the marker.
PRESEL HYS	Compensates for hysteresis in the preselector filter.
PRESEL On Off	Bypasses the preselector and low-pass filter.
PRESEL PARTIAL	Adjusts the tracking of the preselector filter.
PRESEL PEAK	Adjusts the tracking of the preselector filter to yield maximum amplitude accuracy at the active marker position.
pre-select	Accesses the softkeys that control the preselector functions.

Table 3-1. SoftKey Quick Reference, Organized by Function (continued)

Menu Key	Definition
Programming-Related Functions	
`66 Mode On Off`	Enables use of HP 8566B spectrum analyzer programming commands.
`ANY CHR`	Enters an ASCII character into the data line.
`CLEAR TO END`	Deletes characters on the data line from the entry window to end of data line.
`COMMAND`	Accesses a set of editing functions which may be used to compose and execute short programming routines.
`CONT`	Resumes program operation.
`DEBUG FAST`	Activates a fast debugging routine that executes the program quickly and is useful for trapping errors.
`DEBUG On Off`	Activates debugging of user-defined functions that have been stored in internal memory.
`DEBUG SLOW`	Activates a slow debugging routine that executes the program slowly to allow monitoring of each command execution, much like stepping through a program on a computer.
`DELETE CHAR`	Deletes individual characters at the entry window position on the data line.
`DELETE or...`	Selects the replacement-editing function for the programming text on the data line at the bottom of the display.
`ENTER COMMAND`	Executes the contents of the data line when it contains properly constructed programming-command statements.
`INSERT or...`	Selects the delete-editing function for the programming text on the data line at the bottom of the display.
`PAUSE`	Suspends program operation.
`REPLACE or...`	Selects the insert-editing function for the programming text on the data line at the bottom of the display.
`SELECT CHAR`	Enters into the data line any character listed in the character list, which appears at the left side of the display when `COMMAND` is pressed.
`SPACE`	Inserts a space into the programming text on the data line.
`STEP`	Executes each successive program command, one at a time.
`debug`	Accesses the program-debugging softkey functions.

Table 3-1. SoftKey Quick Reference, Organized by Function (continued)

Menu Key	Definition
Service-Related Functions	
ANALYZR TEST	Initiates a self-test routine.
BLOB On Off	Executes a function that draws a blob that moves around the display.
CANCEL	Cancels the various memory-erase operations.
CONFIRM RESTART	Confirms that you really want to perform a restart.
DETECTR GND AUT	Grounds internal ADC input for troubleshooting.
ERASE ALL	Erases all user memory.
LCL OSC START	Sets the start frequency of the sweep for an HP 70900B local oscillator source.
LCL OSC STOP	Sets the stop frequency of the sweep for an HP 70900B local oscillator source.
RESTART	Breaks all links and does a system reconfiguration.
ROM VERSION	Displays the date code of the local oscillator read-only memory (ROM) chip.
SERVICE REQUEST	Enables the service request mode by setting the message bit in the status-byte register true.
WARNING On Off	Enables or disables warning messages from being displayed on the display.
ERASE/RESTART	Accesses erase/restart softkey functions.
Signal-Detection Functions	
CPL DET On Off	Control the coupling between LG, LN, and DETSEL.
DET SEL LOG V	Selects the hardware detector used for trace data (LOG or V).
DETECTR AutoMan	Activates normal detection.
GROUND	Grounds the video detector.
NEG PK	Displays the minimum signal level detected during each sample interval.
NORMAL	Chooses between positive- and negative-peak values, according to the Rosenfell algorithm, which tests to see if a response rises and falls in the sampling interval.
POS PK	Displays the maximum signal level detected during each sample interval.
SAMPLE	Displays the instantaneous signal level detected at the beginning of the sample period.
detectr	Accesses the signal-detection mode softkeys.
log/lin detectr	Accesses additional signal-detection mode softkeys.

Table 3-1. SoftKey Quick Reference, Organized by Function (continued)

Menu Key	Definition
Signal-Identification Functions	
IMAGE N START	Determines the frequency range for possible image or harmonic responses by selecting the lowest and highest local oscillator harmonic used for mixing, according to the tuning equation below.
IMAGE N STOP	Determines the frequency range for possible image or harmonic responses by selecting the lowest and highest local oscillator harmonic used for mixing, according to the tuning equation below.
IMAGE SHIFT	Selects the shift-identification or image-identification methods. Its
SIG ID -> CF	Places the active marker on the identified real signal and centers it on the display.
SIG ID AMPTD Δ	Specifies the amplitude difference between the marked signal and signals tested as its image or harmonic.
SIG ID MAN OFF	Selects automatic or manual mode. Its preset state is automatic mode.
SIGNAL IDENT	Executes a signal-identification routine using either the image or shift method.
sig id options	Accesses the signal-identification softkey functions.
Signal-Path Functions	
COUPLNG AC DC	Activates ac or dc coupling for the spectrum analyzer input.
EXT IF On Off	Switches the IF signal path.
EXT VID FM IQ	Controls the external video switch (if present).
PATHLOK On Off	Specifies the signal path through the spectrum analyzer.
select adc	Switches between the internal and external video-processing paths.
select input	Accesses a softkey menu that lists the available input ports.

Table 3-1. SoftKey Quick Reference, Organized by Function (continued)

Menu Key	Definition
Sweep and Trigger Functions	
CONT SWEEP	Sweeps the measurement range when the trigger conditions are met.
EXT	Synchronizes the sweep with an external signal.
HYS LEVEL	Defines the change in video-signal level required for video triggering.
LINE	Synchronizes the sweep with the power-line frequency.
OVERSWP On Off	Allows faster sweep times (up to five times faster) when specified accuracy is not required and the UNCAL indicator is undesirable.
SINGLE SWEEP	Initiates one sweep if the trigger conditions are met.
SWPTIME AutoMan	Specifies the rate that the analyzer sweeps the current measurement range.
TRIGGER FREE	Triggers the sweep with the spectrum analyzer, internal-triggering circuitry.
VIDEO LEVEL	Specifies the trigger level for the video softkey function.
VIDEO	Triggers the sweep with the detected, filtered, input signal (video).

Table 3-1. SoftKey Quick Reference, Organized by Function (continued)

Menu Key	Definition
Tracking Generator Functions	
A-C ->A On Off	Subtracted trace C from trace A, point by point, and the result is stored in trace A.
ALC ALT	Connects the automatic level control of the source to an alternate internal detector.
ALC EXT	Connects the automatic level control of the source to an external negative detector (0 to 100 millivolts).
ALC NRM	Connects the automatic level control of the source to the normal internal detector of the tracking generator.
AM % On Off	Sets and controls the amplitude-modulation percentage (depth) of the source.
AM FREQ	Selects the internal amplitude-modulation frequency of the source.
AM INT EXT	Selects the amplitude modulation input.
AVERAGE SHRT->C	Works in conjunction with the STORE OPEN->C softkey to reduce mismatches and directivity effects for reflection measurements.
BLANKNG On Off	Turns off blank source.
PWR STP AutoMan	Sets the power step-size for the SRC PWR On Off, PWR SWP On Off, and SRC PWR OFFSET softkeys.
PWR SWP On Off	Works in conjunction with the SRC PWR On Off softkey to sweep the amplitude level of the source output.
SRC ATN AutoMan	Allows the source attenuator level of an HP 70300A RF tracking generator to be automatically or manually changed.
SRC OSC INT EXT	Selects the 21.4 MHz oscillator that mixes with the spectrum analyzer local oscillator to produce the source output at the RF OUTPUT port on the tracking generator.
SRC PWR OFFSET	Allows a user-determined value to be added to the requested source-power output-level readout, which enables the user to calibrate the source output.
SRC PWR On Off	Sets the source power level at the RF OUTPUT> port on the front panel of the tracking generator.

Table 3-1. SoftKey Quick Reference, Organized by Function (continued)

Menu Key	Definition
Tracking Generator Functions — Continued	
STM RSP MIL Cpl	Optimizes system operation for stimulus-response measurements, but also allows system gains to change (such as with a reference level change).
STM RSP On Off	Optimizes system operation for stimulus-response measurements.
STORE OPEN ->C	Works in conjunction with the AVERAGE SHRT->C softkey to reduce mismatches and directivity effects for reflection measurements.
STORE THRU->B	Is used in the normalization process for transmission measurements.
TRACKNG ADJUST	Allows you to adjust the tracking of the tracking generator output manually with the sweeping of the local oscillator, by centering the signal response in the IF resolution bandwidth filters.
TRACKNG PEAK	Maximizes the amplitude of the active trace at the point indicated by the active marker.
alc/track	Selects the automatic level control type and tracking adjustments functions for the tracking generator module.
modultn	Accesses the modulation softkey functions.
power	Accesses the source power softkey functions.
trace norm	Accesses the trace-normalization softkey functions.
track gen	Accesses the tracking-generator softkey functions.

Table 3-1. SoftKey Quick Reference, Organized by Function (continued)

Menu Key	Definition
User-Defined Functions	
`DEFINE USR KEY`	Incorporates menu softkeys into the user-softkey menu, and may be used to erase softkeys individually from the user-softkey menu.
`DISPOSE USER`	Erases a file containing a menu of user softkeys from user memory.
`EDIT FUNCDEF`	Displays a user-defined function on the data line for editing.
`PRESET USER`	Restores the default menu for the user softkeys, which consists of the following softkeys:
`RECALL USER`	Clears the current menu of user softkeys, then loads the contents of a user-softkey file into the user-softkey menu.
`SAVE USER`	Stores the current menu of user softkeys in a user-softkey file.
`catalog & MSI`	Lists the contents of the currently selected user memory, giving names of entries, their size and type, and the amount of available memory.
`execute DLP`	Displays a menu of softkeys that execute user-defined functions.
`key control`	Accesses the user-defined softkey functions.

Functional Grouping Definitions

A definition of the various types of functions are detailed in this section. The various functional groupings are:

- Amplitude Functions
- Amplitude-Correction Functions
- Bandwidth Functions
- Calibration Functions
- Display Functions
- External-Mixer Functions
- Frequency Functions
- Instrument-State Functions
- Lightwave Functions
- Limit-Line Functions
- Marker Functions
- Memory-Related Functions
- Power-Meter Functions
- Preamplifier Functions
- Preselector Functions
- Programming-Related Functions
- Service-Related Functions
- Signal-Detection Functions
- Signal-Identification Functions
- Signal-Path Functions
- Sweep and Trigger Functions
- Trace-Processing Functions
- Tracking-Generator Functions
- User-Defined Functions

Note To locate individual softkeys that are accessible when the (MENU) key is pressed, see the softkey menu maps in Chapter 2.

Amplitude Functions

The amplitude softkeys change the input attenuation and scale of the displayed amplitude measurement results.

Amplitude-Correction Functions

The amplitude-correction functions enhance amplitude measurement accuracy. The user can define amplitude corrections for a specific frequency-measurement range and enter the corrections through the front panel keyboard. The user-defined corrections do not affect the system amplitude-correction factors. The user calculates the amplitude corrections for a specific measurement. The amplitude and related frequency values are entered in a limit-line table, using the limit-line softkeys. The user then converts the limit-line file into an amplitude correction, using the softkeys described in this section.

The operation of the limit-line softkeys must be understood before using the softkeys described in this section.

Bandwidth Functions

The bandwidth softkeys affect how the resolution bandwidths and video-bandwidths are applied to an input signal.

Calibration Functions

The calibration softkeys are used to configure the system for calibration and perform the calibration routines. The calibration routines can be selected and run individually.

For a lightwave signal analyzer, the lightwave signal path has been calibrated at the factory and does not require additional calibration. However, the RF or microwave signal path through the HP 70810B lightwave section is calibrated using the functions provided in this section.

Display Functions

The display softkeys control the display of the graticule, screen annotation, display line, and blanking of displayed trace information. Other display softkeys are used to display text created by the user in the title line at the top of the display.

External-Mixer Functions

The external-mixer softkeys control the measurement range when an external mixer is used to extend the spectrum analyzer frequency range. The softkeys select the measurement range and bias the external-mixer gain. They also compensate for conversion loss at the input port of the external mixer interface module.

The external-mixer softkeys are operational when the input to an external mixer interface module (for example, an HP 70907A external mixer interface module) is active. Press the `select input` softkey to access the menu of available input-related softkeys.

Frequency Functions

Instrument-State Functions

The instrument-state softkeys control settings for specific analyzer functions and store the settings in internal analyzer memory.

Press (INSTR PRESET) or (I-P) to set all softkey settings to their preset state. See Appendix A for a list of the instrument settings that are affected by instrument preset.

Lightwave Functions

The lightwave softkeys provide the analyzer functions used for lightwave signal analysis. The softkeys are present when a lightwave signal path has been selected using the softkeys accessed by the `select input` softkey.

CAUTION Inaccurate signal trace measurements can occur if HSWP IN/OUT on the HP 70810B lightwave section is not connected to HSWP IN/OUT on the HP 70900B local oscillator source.

Limit-Line Functions

The limit-line softkeys allow the user to define amplitude and frequency test parameters. The limit-line functions compare trace data to a set of amplitude and frequency test parameters while the analyzer is sweeping the measurement range.

The test parameters are stored in internal or external memory as limit-line files and recalled for testing into a limit-line table.

Marker Functions

The marker softkeys allow the user to pinpoint and analyze portions of the signal trace. The marker itself is a bright diamond- or square-shaped character positioned along the signal trace. The marker softkeys are data-processing functions that mark areas of Traces A, B, or C for signal identification, mathematical trace manipulation and data transfer.

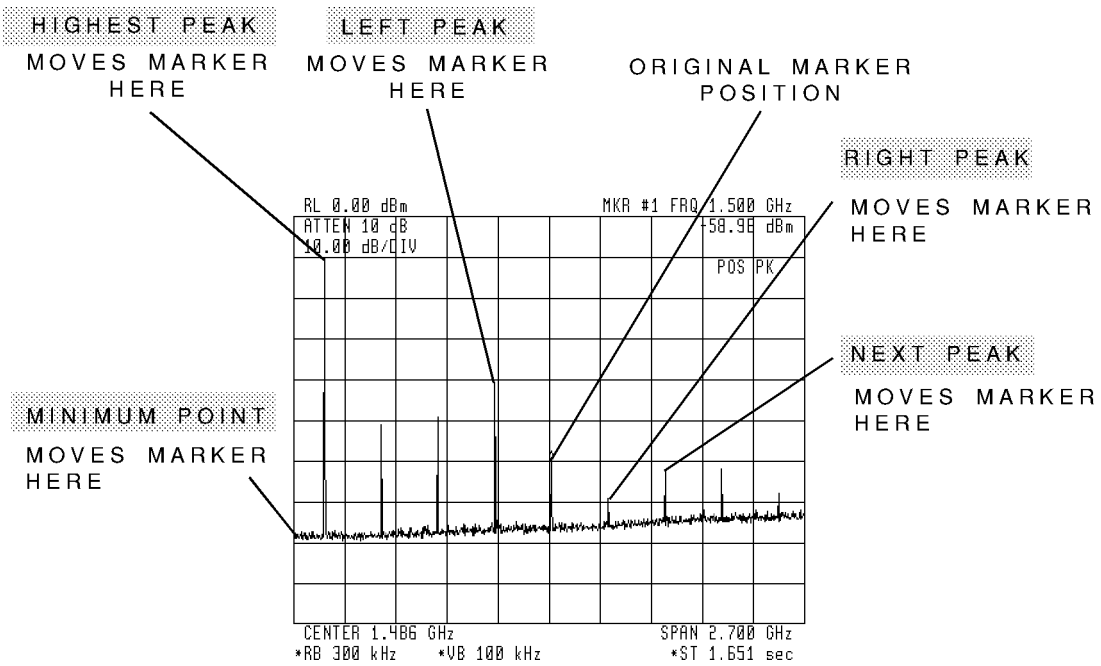

Figure 3-1. Marker-Peak Functions Analyze Trace Data

Memory-Related Functions

Memory is an area where information can be stored for future recall. The memory-related functions perform the operations for memory storage and retrieval.

Custom functions can also be created by the user and stored in memory for later execution using user-defined front panel softkeys or an external computer. Memory can also store trace data, variables and arrays of data for data processing.

Power-Meter Functions

The power-meter softkeys control the adjustment, annotation readout, and calibration of a average-power meter. Both the HP 71400C lightwave signal analyzer and HP 71401C lightwave signal analyzer have an HP 70810B lightwave section installed that contains an internal average-power meter.

CAUTION Inaccurate signal trace measurements can occur if HSWP IN/OUT on the HP 70810B lightwave section is not connected to HSWP IN/OUT on the HP 70900B local oscillator source.

Preamplifier Functions

The preamplifier softkeys control the preamplifier modules that are installed in the system.

Preselector Functions

The preselector functions are available when a preselector module or RF section with preselector capabilities is installed in the system. To make preselected measurements, be sure the input port on the preselector module is active. Select the active input port with the `select input` softkey.

The analyzer may require recalibration for measurements made with another input port. Refer to the "Calibration Functions" section in this chapter for more information.

Programming-Related Functions

The programming-related softkeys provide various functions for programming from the front panel, troubleshooting programs, and editing user-defined functions.

Service-Related Functions

The service-related softkeys provide various functions for checking analyzer operation, clearing all instrument memory, and modifying the sweep range of the local oscillator.

Signal-Detection Functions

The spectrum analyzer is an analog receiver that translates a detected analog signal into a series of amplitude values, called elements. An interval of time passes while the analyzer sweeps and detects the analog signal. If one sweep of trace data is divided into 800 increments of time, the spectrum analyzer produces 800 trace elements.

The signal-trace detection functions determine how the analyzer chooses one amplitude value for each element from the many amplitude values detected during one of these intervals of time.

Signal-Identification Functions

The signal-identification functions distinguish real signals from image or harmonic responses.

Two signal-identification methods are available, called shift and image. The image and shift methods test a signal that is marked by the active marker. If a marker is not present, they mark the highest signal peak automatically before beginning the identification process.

Signal-Path Functions

The signal-path functions select the input port and its type of coupling, ac or dc. They also control the signal path through and between modules installed in the system.

Sweep and Trigger Functions

The sweep and trigger functions adjust sweep time and signal triggering. Whenever a sweep is in progress, the "MEASURE" indicator on the front of the HP 70900B local oscillator source is lit. The indicator is off between sweeps and frequency bands.

Trace-Processing Functions

The trace-processing functions detect, store, and manipulate trace information.

The analyzer records measurement results in any of three traces (Trace A, B, or C) as it sweeps through the measurement range. These traces may be swept simultaneously or individually.

Tracking-Generator Functions

The tracking-generator softkeys control the functions of a tracking-generator module.

User-Defined Functions

The user-defined functions provide file-management capabilities for softkey functions that have been created by the user. User-defined functions can be placed in user memory from an internal or external memory, activated to perform a user-defined task, or deleted from memory. The user can create softkey functions for unique or specialized measurement tasks and assign the softkeys to the user-softkey menu. The user-defined functions are created using the softkeys described in “Programming Functions”.

4

Softkey Descriptions

1/T

(inverse sweep-time) describes the marker position in terms of the inverse of the marker sweep-time position.

Functional Type:

marker

Firmkey Access:

`Marker`

Preset State:

Off

3-DIMEN On Off

Turn on or off the three-dimensional trace display capability.

The THREED command sets the number of previous traces to be displayed simultaneously as a three-dimensional display function. The function is activated when you enter a value between 1 and ±50, or when you turn the function on. This value is retained if you turn the function off. It is not changed until you enter a different value.

Functional Type:

active-trace processing

Firmkey Access:

`BWSwp`

Preset State:

Off

66 MODE On Off

(8566B Mode) enables use of HP 8566B spectrum analyzer programming commands. The function sets several system parameters to emulate the remote operation of HP 8566B spectrum analyzer as closely as possible. For example, the trace length is set to 1001 points, and remote marker and trace queries are switched to HP 8566B spectrum analyzer units.

Functional Type:

programming-related and service-related

Firmkey Access:

Misc

Preset State:

Off, Not affected by (IP).

A<-A+B

adds traces A and B point by point, then stores the results in trace A.

Functional Type:

active-trace processing

Firmkey Access:

BWSwp

Preset State:

Off

A-B->A On Off

subtracts trace B from trace A point by point, then stores the results in trace A. The process is continuous and occurs with each sweep.

Functional Type:

active-trace processing

Firmkey Access:

BWSwp

Preset State:

Off

A-B+DL On Off

subtracts trace B from trace A point by point, adds the value of the display line, and then stores the results in trace A. The process is continuous and occurs with each sweep.

Press Misc, DSP LIN On Off to position the display line.

See the DSP LIN On Off softkey description.

Functional Type:

active-trace processing

Firmkey Access:

BWSwp

Preset State:

Off

A-C ->A On Off

(store Trace A minus Trace C into Trace A) Trace C is subtracted from trace A, point by point, and the result is stored in trace A. This math function, used in the normalization process, improves measurements by allowing errors to be subtracted out before connecting a device. If trace A is in clear-write mode when this function is executed, the function is continuous.

See the `CLEAR WRT A` softkey description.

Functional Type:

tracking generator

Firmkey Access:

`State`

Preset State:

Off

ACTIVE MARKER

selects a number from 1 to 5 for the active marker. If zero is selected, the markers are turned off.

Functional Type:

marker

Firmkey Access:

`Marker`

Preset State:

Off

ALC ALT

(alternate automatic level control) The automatic level control of the source is connected to an alternate internal detector. The alternate detector at the internal 3.6 GHz amplifier is typically used for measurements between 20 Hz and 10 MHz.

The alternate detector can be used above 10 MHz, but better output flatness can be obtained using the ALC ALT softkey for measurements above 10 MHz. However, accurate measurements can be made with the alternate detector by normalizing.

Use the ALC ALT softkey for wideband applications (for example, 1 kHz to 100 MHz).

Functional Type:

tracking generator

Firmkey Access:

State

Preset State:

Off

ALC EXT

(external automatic level control)

The automatic level control of the source is connected to an external negative detector (0 to 100 millivolts). An external detector can be used to level the output of an amplifier or splitter. With external detectors, use the ALC EXT INPUT connector on the front panel of the tracking generator.

Functional Type:

tracking generator

Firmkey Access:

State

Preset State:

Off

ALC NRM

(normal automatic level control) The automatic level control of the source is connected to the normal internal detector of the tracking generator. The normal internal detector at the tracking generator RF OUTPUT is normally used for measurements between 10 MHz and 2.9 GHz.

Note The `Output Unleveled` error message may occur if `ALC NRM` is executed for frequencies less than 10 MHz.

Functional Type:

tracking generator

Firmkey Access:

`State`

Preset State:

On

alc/track

(automatic level control and tracking adjustment) selects the automatic level control type and tracking adjustments functions for the tracking generator module.

Functional Type:

tracking generator

Firmkey Access:

`State`

Preset State:

Not affected by (IP).

A◀A*DL/(A+B)

Performs trace math A*DL/(A+B)▶A with each sweep.

The ADAPBTL command requires a linear display mode. It multiplies trace A by the display line and then divides the result by the sum of traces A and B. The results are stored in trace A. If trace A is in clear-write mode, the function is continuous and occurs every sweep.

This command allows ratio measurements to be made as a sweep is taken. If trace B has points near the bottom of screen, overflow or poor precision can occur. If a division by zero is attempted, a division by the smallest representable value will be performed instead.

To ensure that correct data is displayed, be sure that a sweep is taken before using this command. Only one trace math operation may be active at any given time.

Functional Type:

active-trace processing

Firmkey Access:

BWSwp

Preset State:

Off

A◀A*DL/(A+B+C)

Performs trace math A*DL/(A+B+C)▶A with each sweep.

The ADAPBPCTL command requires a linear display mode. It multiplies trace A by the display line and divides the result by the sum of traces A, B, and C. The results are stored in trace A. If trace A is in clear-write mode, the function is continuous and occurs every sweep.

This command allows ratio measurements to be made as a sweep is taken. If trace B has points near the bottom of screen, overflow or poor precision can occur. If a division by zero is attempted, a division by the smallest representable value will be performed instead.

To ensure that correct data is displayed, be sure that a sweep is taken before using this command. Only one trace math operation may be active at any given time.

Functional Type:

active-trace processing

Firmkey Access:

BWSwp

Preset State:

Off

A◀A*DL/B)

Performs trace math A*DL/B▶A with each sweep.

The ADBTL command requires a linear display mode. It multiplies trace A by the display line value then divides by trace B. The results are stored in trace A. If trace A is in clear-write mode, the function is continuous and occurs every sweep.

This command allows ratio measurements to be made as a sweep is taken. If trace B has points near the bottom of screen, overflow or poor precision can occur. If a division by zero is attempted, a division by the smallest representable value will be performed instead.

To ensure that correct data is displayed, be sure that a sweep is taken before using this command. Only one trace math operation may be active at any given time.

Functional Type:

active-trace processing

Firmkey Access:

BWSwp

Preset State:

Off

A◀A*DL/C)

Performs trace math A*DL/C▶A with each sweep.

The ADCTL command requires a linear display mode. It multiplies trace A by the display line value, then divides by trace C. The results are stored in trace A. If trace A is in clear-write mode, the function is continuous and occurs every sweep.

This command allows ratio measurements to be made as a sweep is taken. If trace B has points near the bottom of screen, overflow or poor precision can occur. If a division by zero is attempted, a division by the smallest representable value will be performed instead.

To ensure that correct data is displayed, be sure that a sweep is taken before using this command. Only one trace math operation may be active at any given time.

Functional Type:

active-trace processing

Firmkey Access:

BWSwp

Preset State:

Off

A◀A–B

Performs trace math A–B▶A with each sweep.

The AMB command subtracts trace B from trace A, point by point, then places the results in trace A. If trace A is in clear-write mode and `AMB ON` is active, the AMB function is continuous and occurs every sweep. Executing `AMB ON` places trace B in view mode.

The AMBPL command overrides AMB.

Be sure each trace contains a complete sweep of measurement information.

Functional Type:

active-trace processing

Firmkey Access:

`BWSwp`

Preset State:

Off

A◀A–B+DL

Performs trace math A–B+DL▶A with each sweep.

The AMBPL command subtracts trace B from trace A, point by point, adds the display line to the difference, then stores the result in trace A. When AMBPL is executed, trace B is placed in view mode and cannot be swept. If trace A is in clear-write mode when AMBPL is executed, the AMBPL function is continuous and occurs every sweep.

The AMBPL command overrides the AMB command.

Be sure each trace contains a complete sweep of measurement information.

Functional Type:

active-trace processing

Firmkey Access:

`BWSwp`

Preset State:

Off

A◀(A–B)–C

Performs trace math (A–B)–C▶A with each sweep.

The AMBMC command subtracts both trace B and trace C from trace A. The results are stored in trace A. If trace A is in clear-write mode, the function is continuous and occurs every sweep. Only one trace math operation may be active at any given time.

Functional Type:

active-trace processing

Firmkey Access:

BWSwp

Preset State:

Off

A◀(A–B)–C+DL

Performs trace math (A–B)–C+DL▶A with each sweep.

The AMBMCPL command subtracts both trace B and trace C from trace A, and then adds the display line. The results are stored in trace A. If trace A is in clear-write mode, the function is continuous and occurs every sweep. Only one trace math operation may be active at any given time.

Functional Type:

active-trace processing

Firmkey Access:

BWSwp

Preset State:

Off

A◀A–C

Performs trace math A–C▶A with each sweep.

The AMC command subtracts trace C from trace A, point by point, then places the results in trace A. If trace A is in clear-write mode and `AMC ON` is active, the AMC function is continuous and occurs every sweep. Executing `AMC ON` places trace C in view mode.

Be sure each trace contains a complete sweep of measurement information.

Functional Type:

active-trace processing

Firmkey Access:

`BWSwp`

Preset State:

Off

A◀A–C+DL

Performs trace math (A–C)+DL▶A with each sweep.

The AMCPL command subtracts trace C from trace A, and then adds the display line. The results are stored in trace A. If trace A is in clear-write mode, the function is continuous and occurs every sweep. Only one trace math operation may be active at any given time.

Functional Type:

active-trace processing

Firmkey Access:

`BWSwp`

Preset State:

Off

A◀DL*(A+B)/C)

Performs trace math DL*(A+B)/C▶A with each sweep.

The APBDCTL command requires a linear display mode. It multiplies the sum of traces A and B by the display line. Then, this result is divided by trace C. The final results are stored in trace A. If trace A is in clear-write mode, the function is continuous and occurs every sweep.

This command allows ratio measurements to be made as a sweep is taken. If trace B has points near the bottom of screen, overflow or poor precision can occur. If a division by zero is attempted, a division by the smallest representable value will be performed instead.

To ensure that correct data is displayed, be sure that a sweep is taken before using this command. Only one trace math operation may be active at any given time.

Functional Type:

active-trace processing

Firmkey Access:

BWSwp

Preset State:

Off

A METER On Off

Enables readout of currently updated trace point.

The AMETER command enables a readout of the amplitude of the blank-ahead marker in the display's message area. The blank-ahead marker is the point on the trace which is currently being updated by new measurement data.

Functional Type:

amplitude

Firmkey Access:

Amptd

Preset State:

Off

AM FREQ

(amplitude modulation frequency) selects the internal amplitude-modulation frequency of the source. Selections are limited to hardware capability. The instrument-preset amplitude-modulation frequency is set to 1 kHz. If a frequency other than 1 kHz or 400 Hz is entered, the instrument defaults to the nearest value.

Use the numeric keypad to enter an amplitude modulation frequency value within the specified parameter range. The ▲ and ▼ step keys change the value in a 1, 3, 10 sequence. The knob changes the value continuously.

Functional Type:

tracking generator

Firmkey Access:

State

Preset State:

1 kHz or hardware limit.

AM INT EXT

(amplitude modulation input) selects the amplitude modulation input. The selection is either the internal continuous wave modulation of the tracking generator or the external modulation source at the AM INPUT port.

Functional Type:

tracking generator

Firmkey Access:

State

Preset State:

INT

AM % On Off

(amplitude modulation percentage) sets and controls the amplitude-modulation percentage (depth) of the source.

Use the numeric keypad to enter percent values between 0 and 100 and terminate the entry with the `ENTER` softkey. The ▲ and ▼ step keys change the amplitude modulation percentage in steps of 10%. The knob changes the amplitude modulation percentage continuously between 0 and 100%.

Functional Type:

tracking generator

Firmkey Access:

`State`

Preset State:

Off at 0 Hz

AMPCOR -> LOWER

(amplitude corrections -> lower limit line) stores amplitude correction values as a lower limit line.

Use this function to return previously used amplitude-correction values to the lower limit-line table for modification.

The amplitude corrections must first be entered into the lower limit-line table, using the limit-line softkey functions. The limit line is then stored as amplitude-correction values, using the `LOWER-> AMPCOR` softkey.

After the correction values are stored in the limit-line table, they can be modified, using the appropriate limit-line softkey functions.

Use the `LOWER -> AMPCOR` softkey to store and enable the amplitude-correction values.

Functional Type:

amplitude-correction

Firmkey Access:

`Misc`

Preset State:

Off

AMPCOR On Off

Apply amplitude correction at specified frequencies.

Use AMPCOR to compensate for frequency-dependent amplitude variations at the input port. Pairs of frequency-amplitude correction points can be entered, depending on the amount of available internal memory. The frequency values entered must be equal or be in increasing order, or an error condition results. Whenever AMPCOR is on, the correction values are added to all measurement results.

The values of the correction points are applied across the active measurement range. Between points, the correction values are interpolated. When measuring at frequencies outside the first and last correction points, these values are used as the correction value.

When AMPCOR is executed, the frequency-amplitude pairs are stored in internal memory. `DISPOSE ALL`, FORMAT, and `PERASE` erase the amplitude-correction pairs from memory.

Because AMPCOR adjusts IF gain or attenuation, AMPCOR should be used with care when measuring signals near the compression level that are also at a frequency that is corrected by the AMPCOR command.

Functional Type:

amplitude

Firmkey Access:

`Amptd`

Preset State:

Off

AMPCOR -> UPPER

(amplitude corrections -> upper limit line) stores amplitude correction values as a upper limit line.

The amplitude corrections must first be entered into the upper limit-line table, using the limit-line softkey functions. The limit line is then stored as amplitude-correction values, using the `UPPER-> AMPCOR` softkey.

After the correction values are stored in the limit-line table, they can be modified, using the appropriate limit-line softkey functions.

Use the `UPPER-> AMPCOR` softkey to store and enable the amplitude-correction values.

AMPCOR -> UPPER

Functional Type:

amplitude-correction

Firmkey Access:

Misc

Preset State:

Off

AMP REF OFFSET

(amplitude reference offset) allows the displayed power level to be adjusted, using a relative-amplitude offset value, specified by the user.

This function is typically used when there is a known loss in the measurement system that can be compensated for by inserting a relative amplitude offset.

The function offsets all amplitude readouts without affecting the detected trace amplitudes. The amplitude offset range is ±300 dBm.

CAUTION Using an amplitude reference offset can mask an overdriven input and cause inaccurate measurements. The analyzer adjusts all internal hardware based on the original reference level and does not incorporate the offset value. Before using the amplitude reference offset function, be sure to verify that the input signal is not excessive for the range of reference and attenuator settings that are used during the measurement.

When an offset is active, it is added to all amplitude readouts including the marker, threshold, reference level, display-line, and calibration-power readouts; ROFFSET appears at the top of the display. The offset also affects any amplitude information returned to a computer during remote-control operations. To enter an offset, use the numeric keypad and terminate the entry with the dB softkey. The offset value can be changed in increments of one graticule division using the ▲ and ▼ keys. Use the front panel knob to change the offset value sequentially.

To eliminate an offset, activate the amplitude-reference offset function and enter zero, or press INSTR PRESET. Offsets are stored and recalled with save and recall softkeys SAVE STATE and RECALL STATE.

Functional Type:

amplitude

Firmkey Access:

Amptd

Preset State:

0 dB

AMPTD VALUE

moves the entry window in the limit-line table. The amplitude value softkey function defines the amplitude value of the beginning of each limit-line segment.

See the TYPE and FREQ VALUE softkey descriptions.

Functional Type:

limit-line

Firmkey Access:

Misc

Preset State:

Off

ANALYZR TEST

initiates a self-test routine.

The analyzer test function initiates a self-test of the currently configured system. Tests are performed automatically to determine if the instrument is working properly.

Any errors are reported automatically on the display screen.

Functional Type:

service-related

Firmkey Access:

Misc

Preset State:

Off

ANOTATN On Off

(annotation on/off) turns the displayed annotation on and off. See Figure 4-1.

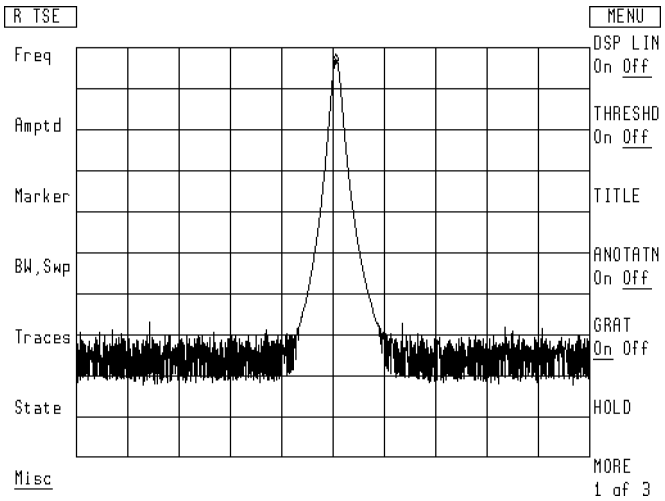

Figure 4-1. Blanked Annotation

Functional Type:

display

Firmkey Access:

Misc

Preset State:

On

ANY CHR

(any character) enters an ASCII character into the data line. Enter a character by typing its 3-digit ASCII code.

Functional Type:

programming-related

Firmkey Access:

Misc

Preset State:

Off

ATTEN AutoMan

(attenuation automatic/manual) varies either RF input attenuation or optical input attenuation. A lightwave signal analyzer provides both types of input attenuation depending on the signal path setting. When an RF or microwave signal path is selected, the input attenuation can be varied from 0 to 70 dB, in 10 dB increments.

RF or microwave input attenuation is normally coupled to the reference level. When coupled, the attenuator changes as the reference level changes to limit the signal level to the first mixer, as specified by the setting of the `MAX MXR LEVEL` softkey. The signal level to the mixer is limited to avoid amplitude inaccuracies and damage to the spectrum analyzer.

Note Because an RF or microwave spectrum analyzer can be damaged easily when input attenuation is not present, input attenuation below 10 dB can be set only with the numeric keypad or a remote programming command.

For a lightwave signal analyzer, the input attenuation range and incremental steps of attenuation depend on whether the analyzer is in optical or electrical mode. The attenuation range for optical mode is half the range for electrical mode because of a factor of two difference between optical and electrical display units when they are expressed in dB. The attenuation range is also dependant on the lambda wavelength setting of 850 nm, 1300 nm, or 1550 nm. See Table 4-1.

Optical input attenuation is also coupled to the reference level. When coupled, the attenuator changes as the reference level changes. There is a lower attenuator limit of 1 dB in optical mode and 2 dB in electrical mode.

Table 4-1 illustrates the input attenuation that is available when different signal paths are selected.

Table 4-1. Signal Path versus Input Attenuation

Signal Path Selected	Attenuation
RF or μW path	0 to 70 dB in 10 dB increments
Lightwave path (optical mode)	850 nm: 0 to 30 dB in 1 dB increments * 1300 nm: 0 to 30 dB in 1 dB increments 1550 nm: 0 to 28 dB in 1 dB increments
Lightwave path (electrical mode)	850 nm: 0 to 60 dB in 2 dB increments * 1300 nm: 0 to 60 dB in 2 dB increments 1550 nm: 0 to 56 dB in 2 dB increments
* HP 70810B Option 850 lightwave section only.	

To change the attenuation level, set `ATTEN AutoMan` to manual and enter the desired level of attenuation. When the reference-level and attenuation functions are uncoupled, an asterisk appears next to `ATTEN` on the analyzer display. See the `MAX MXR LEVEL` softkey description.

`ATTEN AutoMan`

Functional Type:

amplitude

Firmkey Access:

`Amptd`

Preset State:

Auto, 10 dB for spectrum analyzer, but is dependent on lightwave system and module flatness.

A UNITS AutoMan

selects default amplitude units. To set `A UNITS AutoMan` to manual, press the `A UNITS AutoMan` softkey or select an alternate amplitude readout unit.

Functional Type:

amplitude

Firmkey Access:

`Amptd`

Preset State:

Auto

AUTZERO On Off

(automatic zeroing) selects automatic zeroing of offsets in the internal power meter of the lightwave section.

The signal trace measurement in progress is interrupted while the power meter is being zeroed.

The automatic-zeroing function periodically zeroes the internal average-power meter. This function is preset to on, which allows the zeroing to occur automatically at given time intervals according to the average power being measured and the optical-attenuator setting that is selected. Refer to the table below for the power ranges and their corresponding time intervals.

Range	Displayed Optical Power Level Minus Attenuation	Time
1	0 to –10 dBm	100 minutes
2	–10 to –20 dBm	100 minutes
3	–20 to –30 dBm	100 minutes
4	–30 to –40 dBm	10 minutes
5	–40 to –50 dBm	1 minute

When zeroing occurs, an asterisk (*) appears momentarily to the right of the OPT or ELEC lightwave annotation.

When the softkey function is set to off, the zeroing occurs only when the ZERO softkey is pressed.

See the ZERO softkey description for more information.

Functional Type:

power-meter

Firmkey Access:

Amptd

Preset State:

On

AVERAGE SHRT->C

(store reference, short) works in conjunction with the STORE OPEN->C softkey to reduce mismatches and directivity effects for reflection measurements. This provides a more accurate frequency-response reference trace.

First, set up your measurement system to measure an open reference with Trace A, then execute STORE OPEN->C. Next, set up your measurement system to measure a short reference with Trace A, then execute AVERAGE SHRT->C. Function executed is displayed when the average of the short and open references is stored. If AVERAGE SHRT->C is pressed before STORE OPEN->C is executed, not stored, open 1st is displayed on the analyzer display.

Be sure that Trace A contains one complete sweep of measurement data for the open and short references before executing either STORE OPEN->C or AVERAGE SHRT->C. If the frequency span or the start and stop frequencies are changed, Trace C no longer contains a valid reference for the measurement conditions and a new reference must be obtained. The reference level, reference level position, and vertical log scale may be changed without affecting the reference.

`AVERAGE SHRT->C`

Consider the following operating hints when using the `AVERAGE SHRT->C` function.

- Pressing `AVERAGE SHRT->C` removes any data that was previously stored in Trace C.
- If `AVERAGE SHRT->C` is pressed before `STORE OPEN->C`, a `Not stored, open 1st` error message appears, reminding you to store the open first.
- If `AVERAGE SHRT->C` is pressed when `A–C->A On Off` is on, the `Not stored; A–x->A on` error message appears. The short is not averaged. `A–C->A On Off` must be in the off position.

Functional Type:

tracking generator

Firmkey Access:

`State`

Preset State:

Off

A XCH B

exchanges the contents of the trace A and B registers.

Functional Type:

active-trace processing

Firmkey Access:

`BWSwp`

Preset State:

Off

A XCH C

exchanges the contents of the trace A and C registers.

Functional Type:

active-trace processing

Firmkey Access:

BWSwp

Preset State:

Off

B<-B-DL

subtracts the value of the display line from trace B, then stores the result in trace B.

Press Misc, DSP LIN On Off to position the display line. See the DSP LIN On Off softkey description.

Functional Type:

active-trace processing

Firmkey Access:

BWSwp

Preset State:

Off

BEEPER On Off

compares the amplitude values of the active trace to the parameters listed in the limit-line table.

When `BEEPER On Off` is set to on, the analyzer beeps when the trace data exceeds the upper or lower limits defined in the limit-line table. `FAIL` is also displayed at the top of the display. If the trace data passes the test limits, `PASS` is displayed.

See the `LIMITS On Off` softkey description.

Functional Type:

limit-line

Firmkey Access:

`Misc`

Preset State:

Off

bias

Access bias adjustment softkeys for an external mixer.

Functional Type:

external-mixer

Firmkey Access:

`State`

Preset State:

Not affected by (IP).

BIAS ADJUST

activates a bias current that is specified with the numeric keypad.

Functional Type:

external-mixer

Firmkey Access:

State

Preset State:

0 Amperes

BIAS On Off

activates the softkey functions that control the bias current. To deactivate the bias, set the BIAS On Off softkey to off.

Functional Type:

external-mixer

Firmkey Access:

State

Preset State:

Off

BIAS PK MAX

(bias peak maximum) sets the highest possible bias current available to the BIAS PK START softkey.

Functional Type:

external-mixer

`BIAS PK MAX`

Firmkey Access:

`State`

Preset State:

Hardware dependent.

BIAS PK MIN

(bias peak minimum) sets the lowest possible bias current available to the `BIAS PK START` softkey.

Functional Type:

external-mixer

Firmkey Access:

`State`

Preset State:

Hardware dependent.

BIAS PK RES

(bias peak resolution) determines the number of possible bias currents that are available within a specified range. The user sets the range using the `BIAS PK MIN` and `BIAS PK MAX` softkeys.

Functional Type:

external-mixer

Firmkey Access:

`State`

Preset State:

10 points

BIAS PK START

(bias peak start) peaks the conversion gain for the signal marked by the active marker.

If no marker is present, BIAS PK START places a marker at the highest signal level. To a certain extent, BIAS PK START maintains the marker position, but to ensure best results use as narrow a frequency span as possible.

The lowest and highest bias currents possible are determined by using BIAS PK MIN and BIAS PK MAX.

Functional Type:

external-mixer

Firmkey Access:

State

Preset State:

Off

BLANKNG On Off

Turn off (blank) source.

Functional Type:

tracking generator

Firmkey Access:

State

Preset State:

Off

BLANK TRACES

stops the display of any active trace (trace A, B, or C).

Functional Type:

limit-line

Firmkey Access:

Misc

Preset State:

Off

BLOB On Off

This executes a function that draws a blob that moves around the display. It has no spectrum analyzer related use.

Functional Type:

service-related

Firmkey Access:

Misc

Preset State:

Off

BNKSTRT On Off

(blank start on or off) blanks all displayed trace information for frequencies prior to a calculated frequency point. The frequency point is dependant on the span and resolution bandwidth setting of the analyzer. The calculated frequency point decreases when either the span or the resolution bandwidth is reduced. The selected start frequency setting is not affected by this function.

Turning the blank start function off allows the trace information to be displayed down to the start frequency.

The blank start frequency function is frequently used to suppress the display of the local oscillator feedthrough signal.

Note When making measurements close to the local oscillator feedthrough signal, desired signals may be blanked out. Reduce the span or resolution bandwidth setting to make the desired signal visible.

For a spectrum analyzer, the blank start function is preset to off.

For a lightwave signal analyzer, the blank start function is preset on at instrument preset and is automatically enabled whenever the lightwave input is selected.

Functional Type:

frequency

Firmkey Access:

Freq

Preset State:

Off

B XCH C

exchanges the contents of the trace B and C registers.

Functional Type:

active-trace processing

Firmkey Access:

BWSwp

Preset State:

Off

CAL ALL

executes a calibration routine that applies all correction factors.

For a lightwave signal analyzer, the calibration routine switches the input port selection from the optical input to the RF input of the lightwave section. The calibration routine is then performed through the RF signal path. When the calibration routine is complete, the input port selection is

Functional Type:

calibration

Firmkey Access:

`Amptd`

Preset State:

Interrupted

cal enable

accesses softkeys that control the usage of the system correction factors.

Functional Type:

calibration

Firmkey Access:

`Amptd`

Preset State:

Not affected by (IP).

CAL GAIN

corrects errors in the step gain amplifiers in the IF section and the attenuator in the RF or preselector section.

Functional Type:

calibration

Firmkey Access:

Amptd

Preset State:

Interrupted

CAL LOGAMP

corrects errors in the logarithmic amplifiers in the IF section.

Functional Type:

calibration

Firmkey Access:

Amptd

Preset State:

Interrupted

cal menu

accesses the system calibration softkeys.

Functional Type:

calibration

`cal menu`

Firmkey Access:

`Amptd`

Preset State:

Not affected by (IP).

CAL RES BW

corrects amplitude and frequency anomalies in the resolution bandwidth filters in the IF section.

Functional Type:

calibration

Firmkey Access:

`Amptd`

Preset State:

Interrupted

CAL SRC INT EXT

(calibration source, internal or external) switches between an internal or external calibration reference.

When set to external, the spectrum analyzer executes the calibration routine using the signal at the RF INPUT port for reference. When set to internal, the spectrum analyzer calibrates with an internal calibration reference, such as the one in the external mixer interface module.

Instrument preset sets the calibration source softkey to external except when an external mixer interface module is in the system.

Functional Type:

calibration

Firmkey Access:

`Amptd`

Preset State:

Depends on `preset input` setting.

cal src values

accesses the internal or external calibration source softkeys.

Functional Type:

calibration

Firmkey Access:

Amptd

Preset State:

Not affected by (IP).

CAL VID BW

corrects amplitude and frequency anomalies in the video bandwidth filters in the IF section.

Functional Type:

calibration

Firmkey Access:

Amptd

Preset State:

Interrupted

CANCEL

cancels the various memory-erase operations.

Functional Type:

service-related and memory-related

Firmkey Access:

Misc

Preset State:

Off

catalog & MSI

lists the contents of the currently selected user memory, giving names of entries, their size and type, and the amount of available memory.

Use INTRNL MEMORY, HPIB DISK, and HP-MSIB CARD softkeys to select memory before executing catalog & MSI. Table 4-2 describes file naming used with user memory. Figure 4-2 illustrates a displayed catalog of external memory from a memory card.

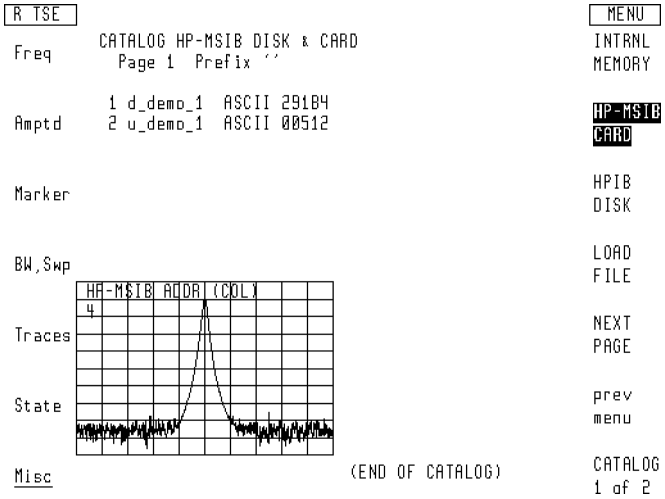

Figure 4-2. Catalog of User Memory with External Memory Selected

Table 4-2. Catalog of User Memory

Stored Article	Storing and Recalling Keys and Programming Commands	File Type	Default File Prefix
State-register file (Instrument settings and title-line)	SAVE STATE, RECALL STATE, LOAD	ASCII	s_
Program file*	SAVE PROGRAM, RECALL PROGRAM, LOAD	ASCII	d_
Trace file	SAVE TRACE A, RECALL TRACE A, LOAD	ASCII	t_
(USER) keys file	SAVE USERKEY, SAVE USER, RECALL USERKEY, RECALL USER, LOAD	ASCII	u_
Limit-line file	SAVE LIMIT, RECALL LIMIT, LOAD	ASCII	l_
User-defined trace †	TRDEF or LIMILINE command	TRACE	none
User-defined variable †	VARDEF command	VAR	none
User-defined function †	FUNCDEF command	FUNC	none
Active user-defined function †	ACTDEF command	AFUNC	none
On-end-of-sweep algorithm †	ONEOS command	ONEOS	none
Trace-amplitude correction offsets †	AMPCOR command	AMPCOR	none

* Indicates article can be stored in external memory only.

† Indicates article can be stored in internal memory only.

Functional Type:

user-defined and memory-related

Firmkey Access:

Misc

Preset State:

Not affected by (IP).

C<-B

stores the results of trace B in trace C.

Functional Type:

active-trace processing

Firmkey Access:

BWSwp

Preset State:

Off

CENTER

specifies the center frequency.

Functional Type:

frequency

Firmkey Access:

Freq

Preset State:

Hardware dependent.

CENTER DELTA

Adjust the delta value for performing preselector centering.

Functional Type:

preselector

Firmkey Access:

Freq

Preset State:

0 Hz

-> CF

(marker to center frequency) sets the center frequency equal to the marker frequency. This process moves the marker and the trace point it marks to the center of the display.

Functional Type:

marker

Firmkey Access:

Marker

Preset State:

Markers off.

-> CF STEP

(marker to center-frequency step size) sets the center-frequency step size equal to the frequency difference between the reference and active markers.

See the MKR NRM On Off and DELTA softkeys descriptions.

Functional Type:

marker

Firmkey Access:

Marker

Preset State:

Markers off.

CF STEP AutoMan

(center-frequency step size) is used with the ▲ and ▼ step keys to change the center frequency by increments called steps.

The default step size is 10 percent of the frequency span. The default step size is selected whenever the `CF STEP AutoMan` softkey is set to automatic.

To change the step size, press `CF STEP AutoMan` and enter a value. Available step sizes vary with the span setting and the configuration of the analyzer system. To null the step-size function, enter 0 Hz for the step size.

Instrument preset resets the step size to the default setting.

Functional Type:

frequency

Firmkey Access:

`Freq`

Preset State:

Set to SPAN/10

CHANGE PREFIX

allows the user to change the file prefix for files that are stored in memory. Each file has an identifying prefix, which distinguishes one type of file, and its contents, from the other file types.

- A state-register file has an “s_” prefix.
- A limit-line file has an “l_” prefix.
- A program file has a “d_” prefix (“d” is for “down-loadable” program).
- A USER-key file has a “u_” prefix.
- A trace file has a “t_” prefix.

`CHANGE PREFIX` activates character-editing softkeys that are used to modify characters in the default file prefixes. These editing softkeys are also used for the title softkey functions.

Functional Type:

memory-related

Firmkey Access:

Traces

Preset State:

Last prefix.

CLEAR TO END

deletes characters on the data line from the entry window to end of data line.

Use the ▲ and ▼ step keys to move the entry window along the text in the data line.

Functional Type:

programming-related and display

Firmkey Access:

Misc

Preset State:

Off

CLEAR WRT A

(clear-write trace A) continuously displays any signals detected at the spectrum analyzer input for the related trace. Initially, clear-write clears the trace register, setting all trace amplitudes to zero. When the trigger initiates a sweep, the trace register is updated as the sweep progresses.

Functional Type:

active-trace processing

Firmkey Access:

BWSwp

Preset State:

On

CLEAR WRT B

(clear-write trace B) continuously displays any signals detected at the spectrum analyzer input for the related trace. Initially, clear-write clears the trace register, setting all trace amplitudes to zero. When the trigger initiates a sweep, the trace register is updated as the sweep progresses.

Functional Type:

active-trace processing

Firmkey Access:

BWSwp

Preset State:

Off

CLEAR WRT C

(clear-write trace C) continuously displays any signals detected at the spectrum analyzer input for the related trace. Initially, clear-write clears the trace register, setting all trace amplitudes to zero. When the trigger initiates a sweep, the trace register is updated as the sweep progresses.

Functional Type:

active-trace processing

Firmkey Access:

BWSwp

Preset State:

Off

C ◀ DAC SEARCH

Places the DAC search values into trace C.

This allows the user to examine all of the DAC values that were used to arrive at the final DAC values.

Functional Type:

preselector

Firmkey Access:

Freq

Preset State:

Off

CLOSE PIT

Repositions the *active* marker on the trace and selects the closest pit.

Functional Type:

marker

Firmkey Access:

Marker

Preset State:

Off

CLOSEST PEAK

Repositions the *active* marker on the trace and selects the closest signal peak.

See the PEAK EXCURSN softkey description to learn about the related instrument settings that increase the effectiveness of the closest-peak marker.

Functional Type:

marker

Firmkey Access:

Marker

Preset State:

Off

COMMAND

accesses a set of editing functions which may be used to compose and execute short programming routines.

Ideally, programming commands are executed via HP-IB with the use of a computer. However, for times when a computer is not available, the COMMAND softkeys may be used to execute functions not available at the front panel.

Refer to the *HP 70000 Modular Spectrum Analyzer Programming Manual* for the spectrum analyzer functions that cannot be executed with the menu softkeys directly.

A character list is displayed when the COMMAND softkey is pressed. Compose the programming routine on the data line by selecting characters from the list. Use the front panel knob to select each character. Refer to Figure 4-3 for the location of the data line and character list. The ▲ and ▼ step keys move the entry window left and right on the data line. The ◀ key moves the entry window to beginning of the data line.

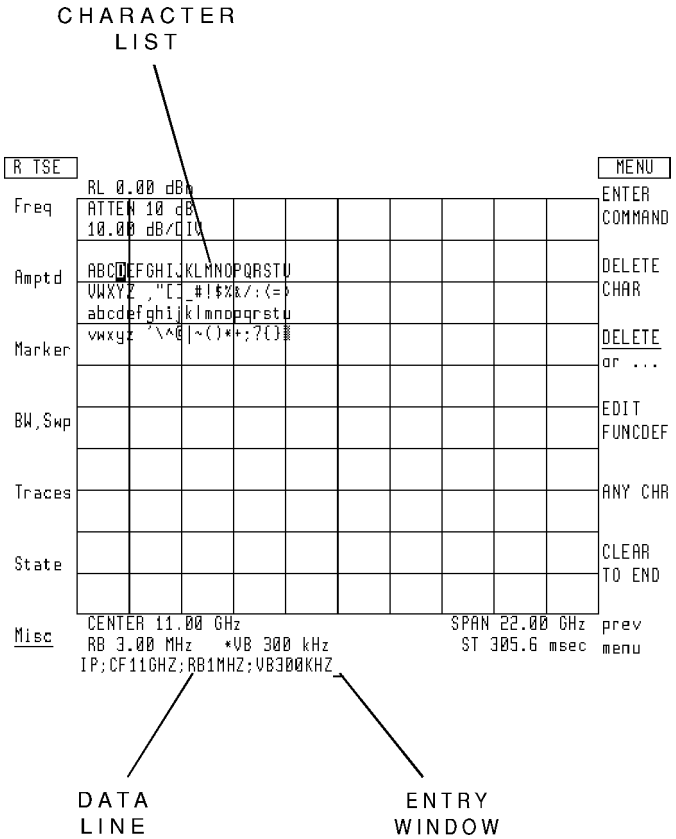

Figure 4-3. Locating the Data Line and Character List

Use the editing functions described in this section to create, modify, or execute a series of programming commands on the data line. Enter the desired commands, separated by a terminator, and execute them using the `ENTER COMMAND` softkey. See the example on the data line of Figure 4-3.

The `COMMAND` softkeys can also create or edit user-defined functions, which execute a series of analyzer commands. Once again, user-defined functions are created or changed more easily using a computer. However, the `COMMAND` softkeys can be useful when the user-defined functions, or their changes, are brief. Refer to the *HP 70000 Modular Spectrum Analyzer Programming Manual*.

User-defined functions are created or edited in the data line at the bottom of the display. Any user-defined function algorithms stored in internal memory can be brought to the data line for editing by pressing `EDIT FUNCDEF`.

See the descriptions for the individual programming commands in *HP 70000 Modular Spectrum Analyzer Programming Manual*. *See also* the `EDIT FUNCDEF` softkey description.

COMMAND

Functional Type:

programming-related

Firmkey Access:

Misc

Preset State:

Off

CONFIG

(configuration) describes the placement of each module in the system by column and row number. Also given are identification and revision numbers. Figure 4-4 illustrates an example of the information displayed after pressing the CONFIG softkey.

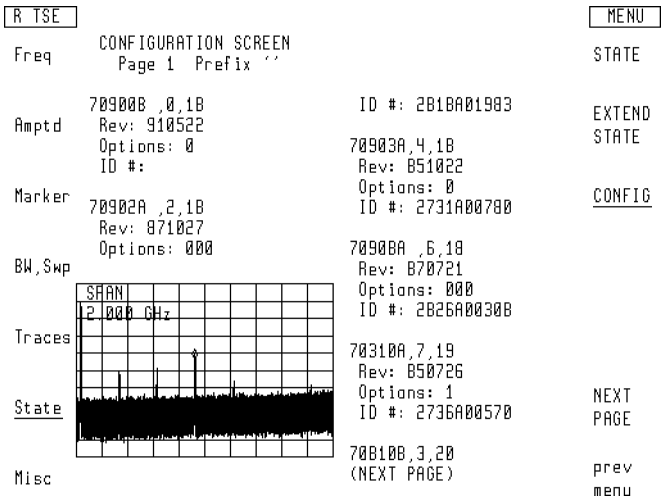

Figure 4-4. CONFIG Displays System Configuration

Functional Type:

instrument-state

Firmkey Access:

Traces

Preset State:

Off

CONFIRM DELETE

erases the contents of the limit-line table after DELETE ALL has been pressed.

Functional Type:

limit-line

Firmkey Access:

Misc

Preset State:

On

CONFIRM ERASE

erases memory when pressed.

Functional Type:

memory-related

Firmkey Access:

Traces

Preset State:

On

CONFIRM RESTART

Confirms that you really want to perform a restart. If you press this key, it breaks all links and does a system reconfiguration.

Functional Type:

service-related

CONFIRM RESTART

Firmkey Access:

Misc

Preset State:

On

CONT

(continue) resumes program operation.

Functional Type:

programming-related

Firmkey Access:

Misc

Preset State:

On

CONT SWEEP

(continuous sweep) sweeps the measurement range when the trigger conditions are met. The sweep is suspended momentarily when new data is entered from the front panel or via HP-IB. The “MEASURE” indicator on the front panel of the local oscillator module is on when the sweep is in progress. The indicator is off between sweeps and frequency bands, during data entry, and for sweep times less than or equal to 10 milliseconds.

Functional Type:

sweep and trigger

Firmkey Access:

BWSwp

Preset State:

On

CONV LOSS

(conversion loss) offsets the reference level to compensate for amplitude losses at the active input port. If necessary, use `select input` to activate the desired input port before specifying its conversion loss offset.

To clear a reference-level offset, enter a conversion loss of zero.

After instrument preset, an offset value of 30 dB is activated automatically for the input port of the external mixer interface module.

See the `select input` softkey description.

Functional Type:

external-mixer

Firmkey Access:

`State`

Preset State:

Depends on `preset input` setting.

COUPLNG AC DC

activates ac or dc coupling for the spectrum analyzer input. Coupling options vary from system to system. When a microwave RF module, such as HP 70905A RF section, HP 70905B RF section, HP 70906A RF section, or HP 70908A RF section, is present, only ac coupling is available. Their RF counterpart, HP 70904A RF section, offers both ac or dc coupling. Instrument preset activates ac coupling.

Functional Type:

signal-path

Firmkey Access:

`State`

Preset State:

Depends on hardware and `preset input`.

CPL AVG On Off

Control the coupling between VAVG and PWRAVG.

CPLAVG allows the operations of PWRAVG and VAVG to be coupled. If this coupling is on, turning on or off one of the averagings will turn the other on or off as well. In addition, the configured average count will be forced to be the same. When the coupling is turned on, the VAVG values are used to set the PWRAVG values.

The VAVG and PWRAVG counts are displayed in the middle left of the graticule area. The VAVG count is preceeded by the label "VIDAVG" and the PWRAVG count is preceeded by the label "PWRAVG".

The rate at which the average count increments for PWRAVG and VAVG may differ since multiple power meter readings may be taken per sweep.

If an attempt is made to turn PWRAVG for a signal path which does not have a power meter, a "Hardware not present" error will be reported.

Functional Type:

amplitude

Firmkey Access:

`Amptd`

Preset State:

On

CPL DET On Off

Control the coupling between LG, LN, and DETSEL.

CPLDET allows the operations of LG/LN and DETSEL to be coupled. If this coupling is on, setting the display mode via LG will do an effective DETSEL LOG. Similarly, LN (with any non-query argument) will do an effective DETSEL LINV. When the coupling is turned on, the current LG/LN state is used to determine what the proper DETSEL state should be.

Functional Type:

signal-detection

Firmkey Access:

`Traces`

Preset State:

On

dBm

allows the amplitude readout annotation for the reference level, marker, display line, and threshold to be changed to dBm.

Functional Type:

amplitude

Firmkey Access:

Amptd

Preset State:

On

dBμV

allows the amplitude readout annotation for the reference level, marker, display line, and threshold to be changed to dBμV.

Functional Type:

amplitude

Firmkey Access:

Amptd

Preset State:

Not affected by (IP).

dBmV

allows the amplitude readout annotation for the reference level, marker, display line, and threshold to be changed to dBmV.

Functional Type:

amplitude

Firmkey Access:

`Amptd`

Preset State:

Not affected by (IP).

debug

accesses the program-debugging softkey functions.

Functional Type:

programming-related

Firmkey Access:

`Misc`

Preset State:

Not affected by (IP).

DEBUG FAST

activates a fast debugging routine that executes the program quickly and is useful for trapping errors. Use the `DEBUG FAST` softkey to isolate faulty command syntax quickly.

Functional Type:

programming-related

Firmkey Access:

Misc

Preset State:

On

DEBUG On Off

activates debugging of user-defined functions that have been stored in internal memory. DEBUG On Off also debugs computer programs as they are sent to the spectrum analyzer via HP-IB.

When the routine is on, programming commands are displayed on the data line beneath the graticule as they are executed. When a faulty analyzer command is encountered, subsequent analyzer commands are not executed. The faulty command is the last command shown at the right end of the data line.

Activate the debugging routine before beginning program operation. The debug routine has a fast and slow setting that is activated by pressing either DEBUG FAST or DEBUG SLOW. Since the debug routine slows execution of analyzer commands, it should be turned off when not needed.

Use the PAUSE softkey to stop the program momentarily. Pressing CONT resumes program operation, unless a programming error is encountered. Use the STEP softkey to step through the program one command at a time. Once program execution is halted by a programming error, no further remote input is possible until CONT or DEBUG On Off is pressed or a device clear (CLEAR 718) is sent.

Refer to the *HP 70000 Modular Spectrum Analyzer Programming Manual* for information on debugging and storing new functions in the spectrum analyzer.

Functional Type:

programming-related

Firmkey Access:

Misc

Preset State:

Off

DEBUG SLOW

activates a slow debugging routine that executes the program slowly to allow monitoring of each command execution, much like stepping through a program on a computer. Since the debug routine slows execution of analyzer commands, it should be turned off when not needed.

Functional Type:

programming-related

Firmkey Access:

`Misc`

Preset State:

Off

DEFINE USR KEY

incorporates menu softkeys into the user-softkey menu, and may be used to erase softkeys individually from the user-softkey menu.

Functional Type:

user-defined

Firmkey Access:

`Misc`

Preset State:

Definition process interrupted.

DELETE ALL

erases the contents of the limit-line table and prepares it for new data entry. The `CONFIRM DELETE` softkey must be pressed to complete the erasure of the contents in the limit-line table.

Functional Type:

limit-line

Firmkey Access:

`Misc`

Preset State:

Off

DELETE CHAR

deletes individual characters at the entry window position on the data line. The `DELETE CHAR` softkey is active when `DELETE or...` is selected.

Use the ▲ and ▼ step keys to move the entry window along the text in the data line.

Functional Type:

programming-related and display

Firmkey Access:

`Misc`

Preset State:

Off

DELETE or...

Programming Function When being used as a programming function, this menu key selects the replacement-editing function for the programming text on the data line at the bottom of the display.

When the DELETE or... softkey is present, characters can be deleted from the programming text that is displayed on the data line at the bottom of the display.

Use the ▲ and ▼ step keys to position the entry window under the character that is to be deleted. Use the DELETE CHAR softkey to remove the desired character. To execute the modified program, press the COMMAND softkey.

Display Function When being used as a display function, this menu key allows characters to be deleted from the text that appears to the left of the TITLE entry window at the bottom of the display.

Position the entry window in the TITLE data line under the character that is to be deleted, using the step keys. Use the DELETE CHAR softkey to remove the desired character.

To display the modified text in the title line at the top of the display, press the ENTER LINE softkey.

When DELETE or... is pressed, it selects the replacement editing function at the TITLE entry-window position.

Functional Type:

programming-related and display

Firmkey Access:

Misc

Preset State:

Off

DELETE SEGMENT

erases the specified segment of the limit-line from the limit-line table.

Functional Type:

limit-line

Firmkey Access:

Misc

Preset State:

Off

DELTA

positions a second marker on a trace relative to the position of the active marker, called the reference marker. Once positioned, the new marker becomes the active marker and is called a delta marker.

The delta marker is positioned in terms of frequency, or time if the analyzer is in zero span mode.

DELTA activates the relative-marker mode, which displays two markers and calculates the frequency and amplitude difference between them.

Functional Type:

marker

Firmkey Access:

Marker

Preset State:

Off

---

detectr

accesses the signal-detection mode softkeys.

Functional Type:

signal-detection

Firmkey Access:

Traces

Preset State:

Not affected by (IP).

DETECTR AutoMan

(detector mode, automatic or manual) when set to automatic, activates normal detection, except for the following conditions:

- Sample detection is activated by the video-averaging or the noise-level marker softkeys, `VID AVG On Off` and `MKNOISE On Off`.
- Positive-peak detection is activated by the maximum-hold softkey, `MAX HOLD`.
- Negative-peak detection is activated by the minimum-hold softkey, `MIN HOLD`.

If more than one of the above conditions are met, the first condition has priority, followed by the second condition. Set `DETECTR AutoMan` to manual to restrict control of peak detection to the detector-mode softkeys only.

Functional Type:

signal-detection

Firmkey Access:

`Traces`

Preset State:

Auto

DETECTR GND AUT

Grounds internal ADC input for troubleshooting.

Functional Type:

service-related

Firmkey Access:

`Misc`

Preset State:

AUT

DET SEL LOG V

Select the hardware detector used for trace data (LOG or V).

The DELSEL command works in concert with the CPLDET command to select the detector used for the display. Note that display units are not tied to the detector type. In other words the data can be digitized in volts, and then mathematically converted to dBm for display, or digitized in dBm and displayed in volts.

If CPLDET is on, this mode will change to be optimum for the current display units.

If a detector is selected that is not available, the HARDWARE NOT PRESENT error will occur. If the current path does not have the requested detector type available, the HARDWARE NOT PRESENT error will also occur.

Functional Type:

signal-detection

Firmkey Access:

Traces

Preset State:

LOG

DISPOSE USER

erases a file containing a menu of user softkeys from user memory.

To erase a file, press DISPOSE USER, followed by the file number, then press ENTER.

See the SAVE USER softkey description.

Functional Type:

user-defined

Firmkey Access:

Misc

Preset State:

Off

DSP LIN On Off

(display line) positions a horizontal line, called a display line, anywhere on the graticule. The softkey can be used to delineate a test limit or simplify amplitude-level readings. Press DSP LIN On Off to view the display line and its current amplitude setting. Manually specify the display-line position by using the numeric keypad, the ▲ and ▼ keys, or the front panel knob. Set the DSP LIN On Off softkey to off to blank the line without changing its position. Instrument preset blanks the display line and sets its position at the reference level.

Functional Type:

display

Firmkey Access:

Misc

Preset State:

Off at 0 dBm.

EDIT FUNCDEF

(edit function definition) displays a user-defined function on the data line for editing. EDIT FUNCDEF fetches the definition from internal memory.

CAUTION Do not use the EDIT FUNCDEF softkey to modify user-defined functions comprising more than 239 characters. This can destroy the function.

User definition of traces, variables and functions override standard commands of the same name. No error message is generated if a user-defined name conflicts with a standard command name. Standard commands that have been overridden are unavailable to a remote controller and cannot be used by a down loadable program (DLP) until the user-defined function is eliminated. Use the DISPOSE command to remove the user-defined function.

A user-definition name that ends in an underscore character automatically places the function on the user-softkey menu when the function is defined. Reading a user-defined function named in this manner from external memory also places the function on the user-softkey menu automatically.

Functional Type:

user-defined and programming-related

Firmkey Access:

Misc

Preset State:

Off

edit limit

displays the limit-line table, which lists limit-line parameters, and allows the displayed limit-line parameters to be edited.

Functional Type:

limit-line

Firmkey Access:

Misc

Preset State:

Not affected by (IP).

ENTER COMMAND

executes the contents of the data line when it contains properly constructed programming-command statements.

Functional Type:

programming-related

Firmkey Access:

Misc

Preset State:

Off

enter limit

allows a set of limit-line parameters to be defined by the user. To enter values into the table, position the entry window using the FREQ VALUE, AMPTD VALUE, TYPE, NEXT SEGMENT, and LAST SEGMENT softkeys.

Functional Type:

limit-line

Firmkey Access:

Misc

Preset State:

Not affected by (IP).

ENTER LINE

enters the text created by the user in the “TITLE” entry window into the title display line at the top of the display. The title is displayed until an instrument preset is performed or the title is modified using the TITLE softkey.

Functional Type:

display

Firmkey Access:

Misc

Preset State:

Off

ERASE ALL

erases all user memory. The function is useful when the system is not operating properly and the source of the problem cannot be identified.

Erasing all memory eliminates any error or illegal state that may be resident in memory. If the system operates normally after erasing memory, no further troubleshooting is necessary.

CAUTION Use of the ERASE ALL softkey erases all user memory. Any memory protection provided by other system softkey functions is disabled when this function is used.

Use the NEXT INSTR softkey to reestablish the desired instrument configuration.

Functional Type:

service-related

Firmkey Access:

Misc

Preset State:

Not affected by (IP).

erase/restart

accesses erase/restart softkey functions.

Functional Type:

service-related

Firmkey Access:

Misc

Preset State:

Not affected by (IP).

execute DLP

(execute down-loadable program) displays a menu of softkeys that execute user-defined functions. The softkeys are labeled with the names of the user-defined functions. The functions are stored in internal user memory.

Functional Type:

user-defined, programming-related, and memory-related

Firmkey Access:

Misc

Preset State:

Not affected by (IP).

EXT

(external trigger) synchronizes the sweep with an external signal. The minimum and maximum value of the external signal must be 0 V and +5 V. Connect the trigger signal to the EXT TRIG IN port on the local oscillator rear panel.

Functional Type:

sweep and trigger

Firmkey Access:

BWSwp

Preset State:

Off (trigger)

EXTEND STATE

(extended state) lists module-level parameters and current values for each module of the instrument. This screen is not continuously updated. Figure 4-5 illustrates an example of the information displayed after pressing the EXTEND STATE softkey.

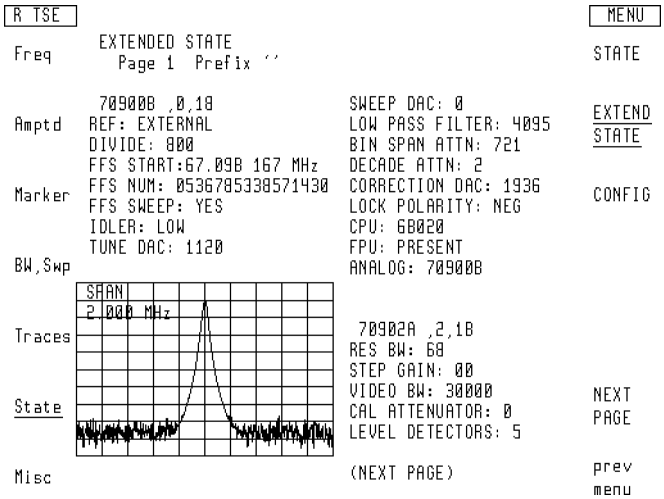

Figure 4-5. EXTEND STATE Lists Module-Level Parameters

Functional Type:

instrument-state

Firmkey Access:

Traces

Preset State:

Off

EXT IF On Off

(external IF) switches the IF signal path. During normal operation, `EXT IF On Off` is set to off to route the 321.4 MHz IF signal to the next frequency converter and to the IF filters inside the analyzer.

Set `EXT IF On Off` to on to send the 321.4 MHz signal to an external device via the 321.4 MHz port, located on the rear panel of an HP 70908A RF section. You can then filter and detect the video information contained in the 321.4 MHz signal with your own filters and detectors.

The `EXT IF On Off` softkey is enabled only when the input port of an HP 70908A RF section is active. Otherwise, an error occurs.

Functional Type:

signal-path

Firmkey Access:

`State`

Preset State:

Off

ext mixer

accesses the external-mixer softkey functions.

Functional Type:

external-mixer

Firmkey Access:

`State`

Preset State:

Not affected by (IP).

EXT VID FM IQ

Control the external video switch (if present). If an external video switch is available, it can be set to one of its supported values. Not all external video switches support all values.

The menu entry is provided only if a choice between FM and IQ is available.

Depending upon the nature of the external video switch, the video signal may or may not be passed on to the normal instrument digitization sections. The user is responsible for exercising the necessary caution when this switch is used.

The NONE setting may not actually disable external video output in all modules.

"Hardware not present" will be reported if an unsupported switch position is requested.

Not all external video switches support all values. The only module currently supporting a value other than NONE is the HP 70911A WB IF section. These values are only available when the HP 70911A WB IF section is the active IF. The following are the supported values:

Functional Type:

signal-path

Firmkey Access:

State

Preset State:

FM

FLATCAL On Off

disables the correction factors that compensate for frequency-dependent gain variations in the RF section. The corrections are disabled when the softkey is set to off.

Functional Type:

calibration

Firmkey Access:

Amptd

Preset State:

On

FORMAT

erases, then initializes the currently selected memory. If internal memory is selected, `FORMAT` erases unprotected files and articles. If a disk drive is selected, `FORMAT` erases and initializes the floppy disk. If a memory card is selected, `FORMAT` erases and initializes the card with the logical-interchange-file (LIF) format.

See the description for the PROTECT programming command in the *HP 70000 Modular Spectrum Analyzer Programming Manual*. Also, see the `P STATE On Off` softkey description.

Functional Type:

memory-related

Firmkey Access:

`Traces`

Preset State:

Off

FREQ

(frequency) describes marker position in terms of frequency.

Functional Type:

marker

Firmkey Access:

`Marker`

Preset State:

On

FREQ FOR CAL

(calibration frequency) specifies the frequency of the calibration reference. Instrument preset sets the calibration frequency to 300 MHz. When an external mixer interface module is in the system, the frequency is set to 321.4 MHz.

Functional Type:

calibration

Firmkey Access:

`Amptd`

Preset State:

Depends on `preset input` setting.

FREQ OFFSET

(frequency offset) offsets the value of absolute frequency annotation. When on, `FOFFSET` is displayed. The offset does not affect the actual measurement range or the frequency response of the displayed trace.

Functional Type:

frequency

Firmkey Access:

`Freq`

Preset State:

0 Hz

FREQ VALUE

moves the entry window in the limit-line table. The frequency value softkey function defines the frequency value of the beginning of each limit-line segment.

See the `TYPE` and `AMPTD VALUE` softkey descriptions.

Functional Type:

limit-line

Firmkey Access:

`Misc`

Preset State:

Off

FRQ LIM On Off

(frequency limit) enables measurements beyond 22 GHz. The softkey is present only if an HP 70908A RF section is installed in the system and its input port has been selected using the `select input` softkey.

Set the `FRQ LIM On Off` softkey to off to enable measurements between 22 GHz and 26 GHz.

Functional Type:

frequency

Firmkey Access:

`Freq`

Preset State:

On (HP 70908A RF section Only!).

fulband KAQUVE

Refer to the `fulband WFDGYJ` softkey description.

Functional Type:

external-mixer

Firmkey Access:

`State`

Preset State:

Hardware dependent.

fulband WFDGYJ

specify the frequency range for measurements made with external mixers. Twelve frequency bands are available. Table 4-3 lists the start and stop frequencies of each band and also shows which local oscillator harmonic (N) is used for the mixing process. Once a band is selected, the frequency range is locked and the spectrum analyzer tunes with the local oscillator harmonic for that band only.

Table 4-3. External Mixing Bands and Associated Mixing Harmonics

Band	Harmonic Number (N)	Frequency Range (MHz)
K	6–	18.0 – 26.5
A	8+	26.5 – 40.0
Q	10+	33.0 – 50.0
U	10+	40.0 – 60.0
V	14+	50.0 – 75.0
E	16+	60.0 – 90.0
W	18+	75.0 – 110.0
F	24+	90.0 – 140.0
D	30+	110.0 – 170.0
G	36+	140.0 – 220.0
Y	42+	170.0 – 260.0
J	50+	220.0 – 330.0

`fulband WFDGYJ`

Functional Type:

external-mixer

Firmkey Access:

`State`

Preset State:

Hardware dependent.

FULL SPAN

sets the measurement range to the maximum frequency range of the system. For example, `FULL SPAN` activates a frequency range of 50 kHz to 26.5 GHz when an HP 70906A RF section RF Section module is installed in the system and its input port has been selected using the `select input` softkey.

Functional Type:

frequency

Firmkey Access:

`Freq`

Preset State:

On

GAINCAL On Off

disables the correction factors that compensate for errors in the attenuator. The corrections are disabled when the softkey is set to off.

Functional Type:

calibration

Firmkey Access:

`Amptd`

Preset State:

On

grat control

accesses the graticule control softkey functions.

Functional Type:

display

Firmkey Access:

Misc

Preset State:

Not affected by (IP).

GRAT On Off

(graticule on/off) turns the graticule on and off.

Functional Type:

display

Firmkey Access:

Misc

Preset State:

On

GRATSCR On Off

Controls the positioning of the displayed horizontal graticule lines.

When a log scale is displayed, the GRATSCRL command positions the horizontal graticule lines on multiples of the current dB-per-div scale. When GRATSCRL is set to off, the horizontal graticule lines are evenly spaced between the bottom and top screen values.

When a linear display scale is used, the horizontal graticule lines are evenly spaced between the bottom and top screen values regardless of the value of GRATSCRL.

`GRATSCR On Off`

Functional Type:

display

Firmkey Access:

`Misc`

Preset State:

Off

GROUND

(ground detection) grounds the video detector. This softkey function is used primarily for diagnostic purposes.

Functional Type:

signal-detection

Firmkey Access:

`Traces`

Preset State:

Off

HIGHEST PEAK

moves the marker to the peak of the highest-level signal detected. Figure 3-1 illustrates the use of the marker softkey function.

Note `HIGHEST PEAK` moves the marker to the IF or local oscillator feedthrough signal, if either is higher than any of the trace values.

See the `PEAK EXCURSN` softkey description to learn about the related instrument settings that increase the effectiveness of the highest-peak marker.

Functional Type:

marker

Firmkey Access:

Marker

Preset State:

Markers off.

HOLD

blanks the active function readout and disables the numeric keypad, knob, and step keys until another analyzer function is activated.

Functional Type:

display

Firmkey Access:

Misc

Preset State:

On

HORZ OFFSET

Select the horizontal offset of the three-dimensional trace display.

The THREEDH command allows you to change the horizontal position of the traces, left or right, of a three-dimensional trace display. The function is activated with the THREED command, plus a value between 0 and ±200. The horizontal position of the traces is retained if you turn the function off with the THREED OFF command. It is not changed until you enter a new value.

Functional Type:

active-trace processing

HORZ OFFSET

Firmkey Access:

BWSwp

Preset State:

Off

HPIB DISK

selects external memory that is accessed on an HP-IB device (for example, a disk drive) that is connected to the analyzer HP-IB port.

The analyzer HP-IB port is located on the display (HP 70004A color display) or mainframe (HP 70001A mainframe) that contains the local oscillator module (70900B). HP-IB protocol does not allow more than one controller on HP-IB. When using the analyzer as a controller, disconnect any external controller from the HP-IB.

When storing data on a disk drive, use HPIB DISK to specify the HP-IB address, unit, and volume number of the disk drive. The default selection is HP-IB address 0, unit 0, volume 0.

To enter new values, press HPIB DISK, and enter numbers in the following sequence. The first number is for the HP-IB address. The second number is for unit. The third number is for volume. The second and third numbers are preceded by a period. For example,

HPIB DISK 1 ENTER selects HP-IB address 1, unit 0, volume 0.

HPIB DISK 0.1 ENTER selects address 0, unit 1, volume 0.

HPIB DISK 1.01 ENTER selects address 1, unit 0, volume 1.

The entry range for each value are as follows:

The HP-IB address can be from 0 – 7.

The unit number can be from 0 – 9.

The volume number can be from 0 – 9.

Functional Type:

memory-related

Firmkey Access:

Traces

Preset State:

Not affected by (IP).

HP-MSIB CARD

accesses various types of external memory that are available through an HP-MSIB device. The HP-MSIB CARD softkey is used to select an HP-MSIB address. The type of external memory that is accessed must first be selected using the mass storage functions of the HP-MSIB device. For example, the HP-MSIB CARD softkey can be used to access articles in a memory card on an HP 70004A color display. Be sure that access to the memory card is selected, using the mass storage softkeys for the HP 70004A color display.

The HP-MSIB CARD softkey can access a disk drive through an HP-IB port that is connected to another HP-MSIB device or display. Be sure that access to the HP-IB port is selected using the mass storage softkeys for the HP-MSIB device. The HP-MSIB CARD softkey selects the HP-MSIB address of an HP-MSIB device. The default device address is the HP-MSIB address of the display (for example, an HP 70004A color display) that is connected to the analyzer. New addresses must be specified as a single number. Since most storing devices are at row address 0 on HP-MSIB, the number that HP-MSIB CARD specifies is the column address. If you wish to store on a device that is not at row zero, calculate the HP-MSIB address as follows:

$$\text{HP-MSIB address} = \text{column address} + \text{row address} \times 32$$

To look up the HP-MSIB address of a device or display, press (DISPLAY), address map. Use the front panel knob to locate the desired device address.

Functional Type:

memory-related

Firmkey Access:

Traces

Preset State:

Not affected by (IP).

HYS LEVEL

(hysteresis level) defines the change in video-signal level required for video triggering.

A sweep occurs when the detected signal satisfies the video triggering conditions, which are direction, hysteresis, and level. The sweep occurs when the detected signal increases or decreases (direction) by a specified amount (hysteresis) when approaching a specified amplitude threshold (trigger level).

The HYS LEVEL softkey specifies direction and hysteresis. The analyzer triggers on the rising or falling edge of the video signal. Triggering occurs on the falling edge of the signal when video hysteresis is set for a negative value. For example, entering –5 dB after pressing HYS LEVEL sets video triggering for a decreasing signal direction and 5 dB of hysteresis.

The hysteresis level is preset to 3 dB and cannot exceed ±300 dB. The smallest value allowed is 0.01 dB.

`HYS LEVEL`

See the `VIDEO` and `VIDEO LEVEL` softkey descriptions.

Functional Type:

sweep and trigger

Firmkey Access:

`BWSwp`

Preset State:

3 dB

IMAGE N START

Refer to the `IMAGE N STOP` softkey.

Functional Type:

signal-identification

Firmkey Access:

`Freq`

Preset State:

1

IMAGE N STOP

determine the frequency range for possible image or harmonic responses by selecting the lowest and highest local oscillator harmonic used for mixing, according to the tuning equation below.

$$F_s = N \times F_{LO} \pm IF$$

Where:

F_s displayed response.

F_{LO} is the local oscillator fundamental frequency, which sweeps from 3 GHz to 6.6 GHz.

N is the local oscillator harmonic specified by `LOCK HARMNC#`.

F_{IF} is the spectrum analyzer IF, which equals 321.4 MHz.

Refer to Table 4-14 for the available frequency ranges and related harmonic numbers. Use the `IMAGE N START` and `IMAGE N STOP` softkeys for the image identification method only.

Table 4-14. Frequency Ranges and Corresponding Harmonic Numbers

	Band/Range	Harmonic Number and Sign of IF (N)
Internal Mixing - HP 71210C	2.9 – 6.2	–1
	6.0 – 12.7	–2
	12.5 – 19.9	+3
	19.7 – 22.0/26.5	+4
Internal Mixing - HP 71200C	2.9 – 6.2	–1
	6.0 – 12.8	–2
	12.6 – 22.0	–4
External Mixing - HP 70907A	K 18.0 – 26.5	+6
	A 26.5 – 40.0	+8
	Q 33.0 – 50.0	+10
	U 40.0 – 60.0	+10
	V 50.0 – 75.0	+14
	E 60.0 – 90.0	+16
	W 75.0 – 110.0	+18
	F 90.0 – 140.0	+24
	D 110.0 – 170.0	+30
	G 140.0 – 220.0	+36
	Y 170.0 – 260.0	+42
	J 220.0 – 330.0	+50

Functional Type:

signal-identification

Firmkey Access:

Freq

Preset State:

40

IMAGE SHIFT

selects the shift-identification or image-identification methods. Its preset state is image.

Functional Type:

signal-identification

Firmkey Access:

`Freq`

Preset State:

Shift if hardware supports it.

INPUT IMPED

(input impedance) specifies the value of input impedance expected at the active input port. The actual input impedance does not change. The input-impedance setting affects all amplitude information, including the values of amplitude readouts, trace arrays, and returned amplitude data.

Functional Type:

amplitude

Firmkey Access:

`Amptd`

Preset State:

50 Ω

INSERT or...

Programming Function When being used as a programming function, this menu key selects the delete-editing function for the programming text on the data line at the bottom of the display.

When the INSERT or... softkey is present, characters can be inserted into the programming text that is displayed on the data line at the bottom of the display.

Each press of the SELECT CHAR softkey inserts a character to the left of the entry window. Use the ▲ and ▼ step keys to position the entry window. Select the desired character from the character list, using the front panel knob, and insert the desired character using the SELECT CHAR softkey. To execute the modified program, press the COMMAND softkey.

Display Function When being used as a display function, this menu key allows characters to be inserted into the text that appears to the left of the TITLE entry window at the bottom of the display. Position the entry window on the TITLE data line over the character that is to be inserted, using the step keys. Use the front panel knob to select the desired character from the character list, and insert the character into the text, using the SELECT CHAR softkey.

To display the modified text in the title line at the top of the display, press the ENTER LINE softkey.

When INSERT or... is pressed, it selects the delete-editing function at the TITLE entry-window position.

Functional Type:

programming-related and display

Firmkey Access:

Misc

Preset State:

Off

INTRNL MEMORY

selects internal memory in the analyzer, specifically in the HP 70900B local oscillator source.

Functional Type:

memory-related

INTRNL MEMORY

Firmkey Access:

Traces

Preset State:

Not affected by (IP).

key control

accesses the user-defined softkey functions.

Functional Type:

user-defined and memory-related

Firmkey Access:

Misc

Preset State:

Not affected by (IP).

LABEL Y On Off

Control the display of annotation for the horizontal graticule.

YLABELS controls the display of annotation for the y-axis. The default is to not display this annotation. When this annotation is on, a number will be displayed on or next to ten of the horizontal graticule line positions (GRAT need not be ON for YLABELS to be ON). The label positions are properly adjusted to account for the effects of GRATSCRL.

Only numbers (not units) are displayed. The units are the same as for the RL display. The precision of the annotation will be the same as for the RL display, with the exception that there is an upper limit of five significant digits (due to limited screen space.)

The values displayed can be affected by the RL, RLPOS, LG, LN, and GRATSCRL commands (as well as any other state changes that affects the RL and the y-axis scaling). AUNITS affects the y-axis annotation in the same way that RL is affected. YLABELS respects ANNOT OFF.

When YLABELS is on, a number will be displayed on or next to ten of the horizontal graticule line positions. The label positions are properly adjusted to account for the effects of GRATSCRL. There needs to be room for 20 lines of text in the graticule area in order for the annotation to be displayed (this requires nearly a full screen display). Each number starts slightly left of the center of the graticule area.

Turning on YLABELS can reduce system speed due to the number of calculations needed when the labels change.

Functional Type:

display

Firmkey Access:

Misc

Preset State:

Off

LAMBDA

selects a calibrated wavelength for a lightwave signal analyzer. Each lambda selection calibrates the lightwave signal analyzer for the best amplitude accuracy at the selected wavelength and applies correction terms automatically.

The softkey function is activated when a lightwave signal path and optical mode are selected.

The calibrated wavelength choices that are available after pressing LAMBDA are:

- Calibrated 1300 nm or 1550 nm wavelength operation for a standard HP 70810B lightwave section.
- Calibrated 850 nm wavelength operation for an HP 70810B Option 850 lightwave section.

The operating wavelength depends on the lightwave signal source that is applied to the input. Select the lambda wavelength that is closest to the wavelength of the lightwave signal source.

Changing lambda wavelength selection resets the RSPSVTY AutoMan softkey to automatic.

Functional Type:

lightwave

Firmkey Access:

Amptd

Preset State:

1300 nm is selected for standard HP 70810B lightwave section, 850 nm is selected for HP 70810B Option 850 lightwave section.

LAST SEGMENT

moves the entry window to the next row in the limit-line table, and specifies that the parameters in that row constitute the last line segment in the limit line.

Functional Type:

limit-line

Firmkey Access:

`Misc`

Preset State:

Off

LCL OSC START

(local oscillator start frequency) sets the start frequency of the sweep for an HP 70900B local oscillator source. When using a tracking generator, the `LCL OSC START` and `LCL OSC STOP` functions can adjust the local oscillator sweep for use as a signal source at the First LO Auxiliary Output port.

When using an external mixer and the `LOCK HARMNC#` softkey, the `LCL OSC START` and `LCL OSC STOP` softkeys can be used to selectively modify the measurement range.

See the `LOCK HARMNC#` softkey description.

Functional Type:

service-related

Firmkey Access:

`Misc`

Preset State:

Set to lowest frequency allowed by hardware.

LCL OSC STOP

(local oscillator stop frequency) sets the stop frequency of the sweep for an HP 70900B local oscillator source. When using a tracking generator, the LCL OSC START and LCL OSC STOP softkeys can be used to adjust the local oscillator sweep for use as a signal source at the First LO Auxiliary Output port.

When using an external mixer and the LOCK HARMNC# softkey, the LCL OSC START and LCL OSC STOP softkeys can be used to selectively modify the measurement range.

See the LOCK HARMNC# softkey description.

Functional Type:

service-related

Firmkey Access:

Misc

Preset State:

Set to highest frequency allowed by hardware.

LEFT PEAK

moves the marker to the closest signal peak of lower frequency. Figure 3-1 illustrates the use of the marker softkey function.

See the PEAK EXCURSN softkey description to learn about the related instrument settings that increase the effectiveness of the left-peak marker.

Functional Type:

marker

Firmkey Access:

Marker

Preset State:

Markers off.

LEFT PIT

Functional Type:

marker

Firmkey Access:

`Marker`

Preset State:

Off

lim <-> ampcor

accesses the softkeys that allow modification of user-defined amplitude-correction values, using the limit-line functions.

Note Two sets of amplitude correction values for the same frequency range can be stored as an upper- and lower-limit line. Each set of amplitude corrections can be recalled using either the `LOWER-> AMPCOR` or `UPPER-> AMPCOR` softkey. Only one set of corrections can be entered as an "AMPCOR" value at a time.

Functional Type:

amplitude-correction

Firmkey Access:

`Misc`

Preset State:

Not affected by (IP).

LIMITS On Off

compares the amplitude values of the active trace to the parameters listed in the limit-line table. When the trace data exceeds the upper or lower limits, FAIL is displayed at the top of the display. If trace data passes the test limits, PASS is displayed.

After defining the limit-line parameters for a desired measurement, start limit-line testing by setting the LIMITS On Off softkey to on.

A beeper alarm can also be set to indicate when the trace data exceeds the upper or lower limits. See the BEEPER On Off softkey description.

Functional Type:

limit-line

Firmkey Access:

Misc

Preset State:

Off

LIMIT START

(limit start frequency) disables the blank start function and sets the start frequency to either a value eight times the resolution bandwidth or 100 kHz, whichever is greater. The purpose of this function is to prevent display of the local oscillator feedthrough signal when making measurements near zero frequency.

When the limit-start function is activated, the resolution bandwidth function automatically becomes the active parameter and the resolution bandwidth function is uncoupled from the frequency span function. An asterisk (*) appears next to the RB resolution bandwidth annotation indicating that the functions are uncoupled.

Manually setting start frequency, center frequency, or frequency span overrides the limit-start-frequency function until it is reinvoked. If the resolution bandwidth is changed, the limit-start-frequency function must be reinvoked to change the start frequency to a new limit. To recouple the resolution bandwidth and span functions, set the RES BW AutoMan softkey to automatic.

See the BNKSTRT softkey description.

`LIMIT START`

Functional Type:

frequency

Firmkey Access:

`Freq`

Preset State:

Off

LINE

synchronizes the sweep with the power-line frequency.

Functional Type:

sweep and trigger

Firmkey Access:

`BWSwp`

Preset State:

Off

LINEAR

places the analyzer in linear power mode, scaling the graticule in linear units proportional to the input power. The bottom of the graticule line represents 0 watts. The `LINEAR` softkey is available only for systems that have an HP 70810B lightwave section installed. The softkey is enabled only when a lightwave signal path and optical mode have been selected.

Functional Type:

amplitude

Firmkey Access:

`Amptd`

Preset State:

Off

LINEAR Vlt Pwr

places the analyzer in linear mode, scaling the graticule in linear units proportional to the input voltage or input power. The bottom of the graticule line represents either 0 volts or 0 watts. The default setting is voltage units.

The softkey is enabled when an RF or microwave signal path has been selected.

For a lightwave signal analyzer, the `LINEAR Vlt Pwr` softkey is also enabled when a lightwave signal path and electrical mode have been selected. When optical mode is selected, the softkey is replaced by the `LINEAR` softkey.

See the `select input` softkey description.

Functional Type:

amplitude

Firmkey Access:

`Amptd`

Preset State:

Off

LINES On Off

changes the appearance of displayed trace information. The spectrum analyzer displays digitized trace information. This means that a sweep of trace information actually consists of a series of unique amplitude values, called elements. During normal operation, the trace elements are connected by lines to give the visual effect of a continuous trace. The `LINES On Off` softkey, when set to on, discontinues the display of the interconnecting lines and displays the trace elements only.

Functional Type:

active-trace processing

Firmkey Access:

`BWSwp`

Preset State:

On

LOAD FILE

recalls any file stored in user memory, duplicating the operation of the recall softkeys . To recall a file, first look up the entry number of the file by viewing the catalog of user-memory. In the catalog, the entry numbers are to the left of the files, in ascending order (see Figure 4-6). Follow this procedure:

1. Press Misc, MORE, catalog & MSI to view the catalog.
2. To recall a file, press LOAD FILE, followed by the entry number, then press ENTER.

The following is an example of loading a file from external memory (a memory card). Refer to the catalog of external memory illustrated by Figure 4-6. To load the program file called demo, press LOAD FILE, and enter 1 using the numeric keypad, then press ENTER.

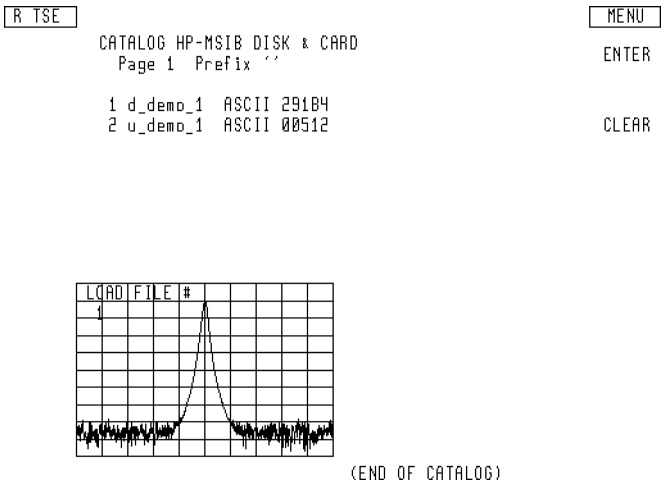

Figure 4-6. Catalog of Internal Memory

Functional Type:

memory-related

Firmkey Access:

Traces

Preset State:

Off

LOCK HARMNC#

(lock harmonic number)limits the frequency range to the frequency band that corresponds to the harmonic number, as shown in Table 4-3. If the harmonic specified is not compatible with the current start- and stop-frequency settings of the spectrum analyzer, the start and stop frequencies are changed so that the local oscillator start and stop values remain unchanged.

Like the `fulband KAQUVE` and `fulband WFDGYJ` softkeys, the lock-harmonic softkeys lock the analyzer to a local oscillator harmonic and its corresponding frequency band.

The lock-harmonic softkeys determine which local oscillator harmonic is used in the mixing equation during external mixing, as follows:

$$F_s = N \times F_{LO} \pm F_{IF}$$

where:

F_s is the displayed response

F_{LO} is the local oscillator fundamental frequency, which sweeps from 3 GHz to 6.6 GHz.

N is local oscillator-harmonic specified by `LOCK HARMNC#`

F_{IF} is the spectrum analyzer IF, which equals 321.4 MHz

The lock-harmonic softkeys also specify the sign (positive or negative) of the IF component in the mixing equation and the local oscillator harmonic number. For example, 6– limits measurements to frequencies from 17.6786 GHz to 39.2786 GHz:

$$F_s = N \times F_{LO} - F_{IF}$$

$$17.6786 \text{ GHz} = 6 \times 3 \text{ GHz} - 321.4 \text{ MHz}$$

$$39.2786 \text{ GHz} = 6 \times 6.6 \text{ GHz} - 321.4 \text{ MHz}$$

When making measurements with a microwave RF section module without external mixing, use the `PATHLOK On Off` softkey (instead of the lock-harmonic softkeys) to limit frequency measurements to a harmonic mixing product.

See the `PATHLOK On Off` softkey description.

Functional Type:

external-mixer

Firmkey Access:

`State`

Preset State:

0

LOCK H# On Off

(lock harmonic on or off) turns the lock harmonic number function on and off.

Functional Type:

external-mixer

Firmkey Access:

`State`

Preset State:

Off

LOCKOUT ANOTATN

(lockout annotation) turns the displayed annotation off.

The annotation cannot be displayed again until either an instrument preset is performed or the system power is cycled. Annotation for instrument states that have been saved using the `SAVE STATE` softkey will be blanked when recalled. Refer to Figure 4-1.

See the `ANOTATN On Off` softkey description.

Functional Type:

display

Firmkey Access:

`Misc`

Preset State:

Off

LOG CAL On Off

disables the correction factors that compensate for logarithm-amplifier errors in the IF section. The corrections are disabled when the softkey is set to off.

Functional Type:

calibration

Firmkey Access:

Amptd

Preset State:

On

LOG dB/DIV

(logarithmic scale) scales the graticule in logarithmic units from 0.01 to 20 dB per division.

Functional Type:

amplitude

Firmkey Access:

Amptd

Preset State:

10 dB for spectrum analyzer and 5 dB for lightwave.

log/lin detectr

accesses additional signal-detection mode softkeys.

Functional Type:

signal-detection

`log/lin detectr`

Firmkey Access:

`Traces`

Preset State:

Not affected by (IP).

LOWER-> AMPCOR

(lower limit line -> amplitude corrections) stores a lower-limit line as amplitude correction values for a specific frequency range. Pressing the softkey replaces any corrections that were entered previously and activates the new amplitude corrections.

The amplitude corrections must first be entered into the lower limit-line table. To prepare the amplitude corrections for entry into the limit-line table, divide the frequency range into segments. Starting at the lowest frequency point, divide the frequency range into segments where the amplitude either remains flat or has a measurable slope.

For frequency segments that slope, record the frequency and amplitude of the beginning point and end point of the segment.

For frequency segments that are flat, record the frequency and amplitude of the first point of the segment only.

Enter these correction values into the lower limit-line table using the limit-line softkey functions.

After the correction values have been entered in the lower limit-line table, press the `UPPER-> AMPCOR` softkey to store and enable the amplitude-correction values.

Note Limit-line files can be used to store amplitude correction values for future use.

Functional Type:

amplitude-correction

Firmkey Access:

`Misc`

Preset State:

Off

LW MODE OptElec

selects either optical units or electrical units for the signal trace when a lightwave signal path is selected.

When the system is configured as a lightwave signal analyzer, optical units are preset at power-on for all amplitude readouts (signal trace and power meter readouts). This configuration is called lightwave optical mode.

Selecting optical mode calibrates the display in optical units that are referenced to the output of the PIN photodiode detector in the HP 70810B lightwave section. Modulated signals on the lightwave carrier are detected and displayed, referenced to the optical input connector.

Selecting electrical mode calibrates the display in electrical units. Modulated signals on the lightwave carrier are detected and displayed.

The trace mode and power meter annotation can be selected in four configurations. The table below illustrates the available annotation selections.

Trace Mode and Power Meter Annotation

Trace Mode	Power Meter
Optical	Optical
Optical	Electrical
Electrical	Optical
Electrical	Electrical

Electrical mode allows the optical-to-electrical responsivity to be varied manually.

See the `RSPSVTY AutoMan` softkey description for more information about setting responsivity manually.

Functional Type:

lightwave

Firmkey Access:

`Amptd`

Preset State:

Optical annotation selected.

marker excursn

Access marker peak and pit excursion softkey menu.

Functional Type:

marker

Firmkey Access:

Marker

Preset State:

Not affected by (IP).

marker readout

selects marker readout annotation.

Functional Type:

marker

Firmkey Access:

Marker

Preset State:

Not affected by (IP).

MAX HOLD A, MAX HOLD B, MAX HOLD C

(maximum hold) compares the current amplitude value of each point on a trace to each corresponding value detected during the previous sweep, then retains the maximum values. The trace is displayed continuously and positive-peak detection is activated automatically.

Functional Type:

active-trace processing

Firmkey Access:

BWSwp

Preset State:

Off

MAX IN AutoMan

(maximum input) specifies the maximum expected signal level to the spectrum analyzer input during a given measurement procedure.

When the maximum input softkey is set to automatic, the maximum expected signal level is equal to the reference level.

Functional Type:

amplitude

Firmkey Access:

Amptd

Preset State:

Auto, 0 dBm

MAX MXR LEVEL

(maximum mixer level) specifies the maximum signal level at the mixer input. This function determines the coupling ratio between the attenuator and the reference level.

Functional Type:

amplitude

Firmkey Access:

Amptd

Preset State:

−10 dBm

MIN HOLD A, MIN HOLD B, MIN HOLD C

(minimum hold) compares the current amplitude value of each point on a trace to each corresponding value detected during the previous sweep, then retains the minimum values. The trace is displayed continuously and negative-peak detection is activated automatically.

Functional Type:

active-trace processing

Firmkey Access:

BWSwp

Preset State:

Off

MINIMUM PEAK

moves the marker to the lowest detected peak level on the trace.

Functional Type:

marker

Firmkey Access:

Marker

Preset State:

Off

MINIMUM POINT

moves the marker to the lowest detected level on the trace. Figure 3-1 illustrates the use of the marker softkey function.

The spectrum analyzer evaluates signals by monitoring the vertical excursions of the trace. The smallest vertical excursion that constitutes a signal is 6 dB unless otherwise specified with the peak excursion softkey function.

See the PEAK EXCURSN softkey description.

Functional Type:

marker

Firmkey Access:

Marker

Preset State:

Off

MIN PIT

Selects the next lowest pit. This would be used to move up after using MKPIT.

Functional Type:

marker

Firmkey Access:

Marker

Preset State:

Off

MIN POINT

Moves the displayed marker to lowest signal level in trace.

The MKMIN command moves the active marker to the minimum value detected. MKMIN operates on the displayed, active trace, or if more than one is displayed, it operates on trace A, B, or C, in that order; or on the trace specified by MKTRACE.

Functional Type:

marker

Firmkey Access:

Marker

Preset State:

Off

MKNOISE On Off

(marker-noise on/off) displays the rms noise level at the marker position. The rms noise level is normalized to a 1-Hz bandwidth and compensates for the errors caused by the following:

- Irregular shape of the resolution bandwidth filters.
- Log amplifiers.
- Difference between the rms values of the noise-floor envelope (which is a narrowband response described by Rayleigh's distribution function) and the true rms value of the noise floor (which is a broadband response).

The marker-noise function activates sample peak detection.

Functional Type:

marker

Firmkey Access:

`Marker`

Preset State:

Off

MKPAUSE On Off

(marker pause on/off) stops the sweep at the marker position from 0 to 1000 seconds. Press `MKPAUSE On Off` to select the pause interval and start the process. Set `MKPAUSE On Off` to off to stop the cycle.

Note Trace data to the right of the marker may be invalid when the marker-pause function is on.

Functional Type:

marker

Firmkey Access:

`Marker`

Preset State:

Off

MKR BW On Off

(marker bandwidth) displays the frequency difference between markers #3 and #2. The function can be used to measure the bandwidth of a displayed signal. Use the REL LEFT and REL RIGHT softkeys to position the markers on the desired signal.

See the REL LEFT and REL RIGHT softkey descriptions.

Functional Type:

marker

Firmkey Access:

Marker

Preset State:

Off

mkr bw/zoom bw

(marker bandwidth and zoom bandwidth) accesses the marker bandwidth and zoom bandwidth softkeys.

Functional Type:

marker

Firmkey Access:

Marker

Preset State:

Not affected by (IP).

MKR NRM On Off

(marker normal on/off) places the active marker on a trace at the specified frequency, or during zero span mode, at the specified unit of time. The softkey activates the normal marker mode where the frequency and amplitude of the active, displayed marker is annotated in the upper right corner of the graticule.

Use the marker normal softkey function to turn off all displayed markers and their readouts, and reset the active marker number to 1.

Instrument preset turns off all markers and their annotation, resets the active marker number to 1, and resets the marker pause-time to zero. `MKR NRM On Off` does not change the time interval for the marker-pause function when it is turned off.

Functional Type:

marker

Firmkey Access:

`Marker`

Preset State:

Off

MK STOP On Off

(marker stop) provides a sweep-to-marker function.

Functional Type:

marker

Firmkey Access:

`Marker`

Preset State:

Off

modultn

(modulation) accesses the modulation softkey functions.

Functional Type:

tracking generator

Firmkey Access:

State

Preset State:

Not affected by (IP).

MRK TRA A B C

(marker trace A B C) specifies whether the active marker is positioned on trace A, B, or C. After instrument preset, trace A is selected.

Functional Type:

marker

Firmkey Access:

Marker

Preset State:

Trace A selected, Trace B and C off.

NEG PK

(negative peak detector) displays the minimum signal level detected during each sample interval. Signal responses may not appear when measuring with wide spans. Negative-peak detection is used during zero-span mode or for diagnostic purposes.

NEG PK

Functional Type:

signal-detection

Firmkey Access:

Traces

Preset State:

Off

NEXT MIN PK

moves the marker to the next lowest detected peak level on the trace.

Functional Type:

marker

Firmkey Access:

Marker

Preset State:

Off

NEXT PAGE

provides view of next page of information.

Functional Type:

instrument-state and memory-related

Firmkey Access:

Traces

Preset State:

Off

NEXT PEAK

moves the marker to the signal peak of greatest amplitude that is less than the current marker amplitude. Figure 3-1 illustrates the use of the marker softkey function.

See the `PEAK EXCURSN` softkey description to learn about the related instrument settings that increase the effectiveness of the next-peak marker.

Functional Type:

marker

Firmkey Access:

`Marker`

Preset State:

Markers off.

NEXT PIT

Moves the marker to the signal peak of greatest amplitude that is greater than the current marker amplitude.

See the `PEAK EXCURSN` softkey description.

Functional Type:

marker

Firmkey Access:

`Marker`

Preset State:

Off

NEXT SEGMENT

moves the entry window to the next row in the limit-line table. Use NEXT WINDOW to enter parameters for additional line segments.

Functional Type:

limit-line

Firmkey Access:

Misc

Preset State:

Off

NO. OF STATES

(number of states) adds or deletes state-register files and their contents from user memory. When the number of files is decreased, the higher numbered files are deleted and their contents are lost. Since state-register files occupy large amounts of memory, conserve memory space by limiting their number.

Functional Type:

instrument-state

Firmkey Access:

Traces

Preset State:

Not affected by (IP).

NOISE ON OFF

provides an external-noise-source drive voltage for noise figure measurements. When the function is switched on, a +28 Vdc output is sent to a noise source drive connector on the front panel of an HP 70620B preamplifier or HP 70621A preamplifier.

Functional Type:

power-meter

Firmkey Access:

Amptd

Preset State:

Off

NORMAL

chooses between positive- and negative-peak values, according to the Rosenfell algorithm, which tests to see if a response rises and falls in the sampling interval. The algorithm translates the video signal as seen at the envelope detector from analog information, that is, continuously changing amplitude values, into digital information comprising a series of finite data points.

The translation process divides the analog information into intervals, then chooses a value from each interval as the data point (element). The result is a combination of positive- and negative-peak detection, where the minimum value detected in one interval is displayed alternately with the maximum value detected in the previous two intervals. Signals that occur within the interval are displayed, even if they occur within an interval that displays the minimum value (as a result of negative-peak detection). Thus, broadband or impulsive signals less than an interval wide are captured and displayed. Figure 4-7 illustrates an example of a signal measurement using the normal function.

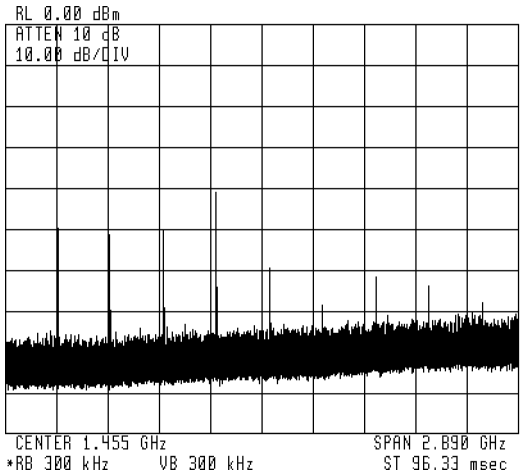

Figure 4-7. Measurement Using Normal-Peak Detection

`NORMAL`

Functional Type:

signal-detection

Firmkey Access:

`Traces`

Preset State:

On

---

oneshot math

accesses oneshot math active-trace processing function softkeys.

Functional Type:

active-trace processing

Firmkey Access:

`BWSwp`

Preset State:

Not affected by (IP).

OVERSWP On Off

(oversweep on or off) allows faster sweep times (up to five times faster) when specified accuracy is not required and the `UNCAL` indicator is undesirable. `OVERSWP On Off` allows an additional 2% of frequency error and 2 dB of amplitude error before the `UNCAL` indicator appears.

Functional Type:

sweep and trigger

Firmkey Access:

`BWSwp`

Preset State:

Off

PARTIAL ERASE

erases all unprotected internal memory contents. PARTIAL ERASE also erases reserved memory, except for the correction factors used by the calibration softkey functions, and serial-number information.

Functional Type:

memory-related

Firmkey Access:

Traces

Preset State:

Not affected by (IP).

PATHLOK On Off

(path lock on/off) specifies the signal path through the spectrum analyzer. Since the MMS system is modular, the input signal can pass through different paths. For example, two signal paths are available for 100-kHz filtering when both the narrowband (HP 70902A IF section) and wideband (HP 70903A IF section) IF Sections are incorporated into one system. If PATHLOK On Off is set to on when the 3 MHz filter is active, the signal path remains in the wideband IF Section when the 100-kHz bandwidth is selected.

When a path is specified, signal inputs are limited to ports available on the path.

When external mixing is not used, PATHLOK On Off limits frequency measurements to a harmonic mixing product when measuring with the microwave RF module.

Functional Type:

signal-path

Firmkey Access:

State

Preset State:

Off

PAUSE

suspends program operation.

Functional Type:

programming-related

Firmkey Access:

`Misc`

Preset State:

Off

PEAK EXCURSN

(peak excursion) is used in conjunction with the marker-peaking functions when measuring low level signals. The peak-excursion softkey selects the minimum trace excursion for peak identification, and is reset to 6 dB with instrument preset.

When the peak-excursion rate is less than 6 dB, the marker-peaking functions may not recognize signals less than 6 dB above the noise floor as peaks. Thus, before applying the marker-peaking functions to signals near the noise floor, the peak-excursion rate must be reduced. However, reducing the peak-excursion rate to values less than 6 dB often causes the marker-peaking functions to identify noise spikes as signals. Avoid this misidentification by reducing the noise floor variance to a value less than the peak-excursion rate, using positive-peak detection, video averaging, or video filtering.

Functional Type:

marker

Firmkey Access:

`Marker`

Preset State:

6 dB

PERIOD

describes the position of the marker in terms of the period, where period equals 1/frequency.

Functional Type:

marker

Firmkey Access:

Marker

Preset State:

Off

PERSIST On Off

simulates analog displays by changing the appearance of displayed trace information. The visual effect suggests the persistence of cathode-ray-tube scopes.

When set to on, PERSIST On Off displays the current sweep of active trace data and the six previous sweeps of active trace information.

To enhance the persistence effect, set sample-detection mode with SAMPLE) and set LINES On Off to off. Spurious signals hidden in modulated signals can often be seen using this technique.

PERSIST On Off does not affect stored trace data and is a visual aid only.

See the SAMPLE softkey description.

Functional Type:

active-trace processing

Firmkey Access:

BWSwp

Preset State:

Off

PIT EXCURSN

Control the excursion value for marker pit operations.

Just as MKPX sets the peak excursion value for marker peak operations, MKPITX sets the pit excursion value for marker pit operations. The MKPITX command specifies the minimum signal excursion for the marker-pit functions (MKPK). Signal movement less than the pit-excursion value is not considered a pit. To be a pit, the skirt of the signal response must dip by at least the pit-excursion value, and then rise by at least the pit-excursion value.

The default pit-excursion value is 3 dB for pits displayed on a logarithmic scale. This means that any pit with an excursion of less than 3 dB on either side of its bandwidth shape is not identified as a pit. If the marker-pit command, `MKPK MIPIT`, is executed on such a pit, the spectrum analyzer does not place a marker at the pit. For signals displayed on a linear scale, the default pit excursion equals

$$excursion = 1 - 10^{\frac{-MKPITX}{200}}$$

Note that if the pit excursion is too small, noise pits are identified as pits. Use VAVG or SMOOTH to minimize noise pits so that signal peaks can be distinguished from noise pits.

Functional Type:

marker

Firmkey Access:

`Marker`

Preset State:

Off

pit,min markers

Access the marker pit operations softkey menu.

Functional Type:

marker

Firmkey Access:

`Marker`

Preset State:

Not affected by (IP).

POS PK

(positive peak detector) displays the maximum signal level detected during each sample interval.

Functional Type:

signal-detection

Firmkey Access:

Traces

Preset State:

Off

power

accesses the source power softkey functions.

Functional Type:

tracking generator

Firmkey Access:

State

Preset State:

Not affected by (IP).

POWER FOR CAL

(calibration power) specifies the power of the calibration reference. Instrument preset sets the calibration power to −10 dBm. When an external mixer interface module is in the system, the calibration power is set to −35 dBm.

POWER FOR CAL

Functional Type:

calibration

Firmkey Access:

Amptd

Preset State:

Depends on preset input setting.

---

power meter

accesses the power meter softkey functions.

Functional Type:

power-meter

Firmkey Access:

Amptd

Preset State:

Not affected by (IP).

POWERON IP/LAST

specifies the instrument state when the instrument is turned on.

To configure the analyzer so that the last state the analyzer was in when power was removed becomes the instrument preset state, set the POWERON IP LAST softkey to last.

To configure the analyzer so that the default preset state is used when the instrument is turned on, set the POWERON IP/LAST softkey to IP.

Functional Type:

instrument-state

Firmkey Access:

Traces

Preset State:

Not affected by (IP).

preamp control

accesses the preamplifier control softkeys. For most configurations, the preamplifier input is on automatically, however, when an HP 70900B local oscillator source is used as a system master, the preamplifiers are switched off when the system is powered up. Use SELECT INPUT, if necessary, to change the signal path.

Functional Type:

power-meter

Firmkey Access:

Amptd

Preset State:

Hardware dependent.

PREAMP N On Off

Turns on a preamplifier. The value of "N" depends on the number of preamplifier modules that are installed in the system. The modules are displayed in a sequence that is dependent on the HP-MSIB address of each module.

Each preamplifier in the system can be switched on or set to bypass using the appropriate PREAMP N On Off softkey.

Functional Type:

power-meter

Firmkey Access:

Amptd

Preset State:

Hardware dependent.

PRESEL CENTER

Perform preselector centering.

Preselector centering is not the same as preselector peaking. Preselector centering still finds the preselector DAC value that causes a peak reading, but it then also finds the DAC values that correspond to the delta signal values. The result is the average of the left and right DAC values.

Functional Type:

preselector

Firmkey Access:

`Freq`

Preset State:

Off

presel center

accesses the softkeys that control the preselector centering functions.

Functional Type:

preselector

Firmkey Access:

`Freq`

Preset State:

Not affected by (IP).

PRESEL DAC

(preselector DAC) enters a value into the preselector DAC for the frequency range corresponding to the frequency at the marker. If a marker is not present, PRESEL DAC places a marker at the center of the display.

Functional Type:

preselector

Firmkey Access:

Freq

Preset State:

Set to midrange of DAC values.

pre-select

accesses the softkeys that control the preselector functions.

The softkey is present, if the system includes a module with preselector capabilities.

Functional Type:

preselector

Firmkey Access:

Freq

Preset State:

Not affected by (IP).

PRESEL HYS

(preselector hysteresis) compensates for hysteresis in the preselector filter. Use PRESEL HYS when changing the center frequency by values greater than N × 100 MHz and when measuring ranges with spans less than N × 100 MHz, where N is the number of the harmonic used for internal or external mixing. Refer to Table 4-15 for the harmonic number N that corresponds to a specific frequency band or external-mixer range.

To use the PRESEL HYS softkey, change the center frequency and press PRESEL HYS. Sweep the measurement range once.

Table 4-15. Frequency Ranges and Corresponding Harmonic Numbers

	Band/Range	Harmonic Number and Sign of IF (N)
Internal Mixing - HP 71210C	2.9 – 6.2	−1
	6.0 – 12.7	−2
	12.5 – 19.9	+3
	19.7 – 22.0/26.5	+4
Internal Mixing - HP 71200C	2.9 – 6.2	−1
	6.0 – 12.8	−2
	12.6 – 22.0	−4
External Mixing - HP 70907A	K 18.0 – 26.5	+6
	A 26.5 – 40.0	+8
	Q 33.0 – 50.0	+10
	U 40.0 – 60.0	+10
	V 50.0 – 75.0	+14
	E 60.0 – 90.0	+16
	W 75.0 – 110.0	+18
	F 90.0 – 140.0	+24
	D 110.0 – 170.0	+30
	G 140.0 – 220.0	+36
	Y 170.0 – 260.0	+42
	J 220.0 – 330.0	+50

Functional Type:

preselector

Firmkey Access:

Freq

Preset State:

Off

PRESEL On Off

(preselector on/off) bypasses the preselector and low-pass filter. During normal operation, these filters are not bypassed in order to minimize the presence of distortion products and image signals. Setting `PRESEL On Off` to off bypasses the filtering, but also improves sensitivity by 8 to 15 dB, depending on the frequency band. The setting of `PRESEL On Off` does not affect system calibration.

Signals at the preselector input are attenuated by the attenuator inside the preselector instead of the attenuator inside an RF section module, regardless of the `PRESEL On Off` setting.

CAUTION If you bypass the preselector by connecting the input signal directly to an RF-section input, the attenuator inside the RF section module is not operative. To avoid damage to the spectrum analyzer, measure signals at the preselector input and use the `PRESEL On Off` to bypass preselection.

Functional Type:

preselector

Firmkey Access:

`Freq`

Preset State:

On, but hardware dependent.

PRESEL PARTIAL

(partial preselector peak) adjusts the tracking of the preselector filter.

Functional Type:

preselector

Firmkey Access:

`Freq`

Preset State:

Off

PRESEL PEAK

(preselector peak) adjusts the tracking of the preselector filter to yield maximum amplitude accuracy at the active marker position. If a marker is not present, PRESEL PEAK places a marker at the highest signal level.

Each time the preselector is peaked, a value is stored in the preselector digital-to-analog converter (DAC). Up to four values can be stored, one for each of four frequency ranges:

Table 4-13. Preselector DAC Frequency Bands

Band	Frequency Range
1	2.7 GHz to 6.2 GHz
2	6.0 GHz to 12.7 GHz
3	12.5 GHz to 19.9 GHz
4	19.7 GHz to 22.0 GHz

Whenever a measurement is made, the current preselector-DAC value corresponding to the selected measurement range determines the preselector tracking. Press PRESEL PEAK to repeak the preselector and store a new When measuring frequency spans greater than 0 Hz, the analyzer must be swept at least once to peak the preselector. Thus, the analyzer requires several minutes to peak the preselector when measuring with slow sweep times. To execute the peaking function quickly, change the span to 0 Hz before pressing PRESEL PEAK.

Functional Type:

preselector

Firmkey Access:

Freq

Preset State:

Off

preset adc

specifies whether internal or external analog-to-digital processing is active after instrument preset is executed. The HP 70900B local oscillator source provides the internal analog-to-digital processing. External analog-to-digital processing is available when one or more HP 70700A digitizer are installed in the system.

The `preset adc` softkey is present when an HP 70700A digitizer is installed in the system. The softkey menu allows the user to select either internal or external analog-to-digital processing. The sequence of digitizer modules displayed in the softkey menu is dependent on the HP-MSIB address of each module.

Functional Type:

instrument-state

Firmkey Access:

`Traces`

Preset State:

Not affected by (IP).

preset input

determines which input port is active after instrument preset is executed. The preset-input softkey accesses a menu of the input ports available in your analyzer system. The sequence of input modules displayed in the softkey menu is dependent on the HP-MSIB address of each module installed in the system.

For specific HP-MSIB addressing information, refer to the *HP 70000 Modular Spectrum Analyzer Installation and Verification Manual*.

Press `preset input`, then select the input-port softkey you wish to activate whenever instrument preset is executed.

Functional Type:

instrument-state

Firmkey Access:

`Traces`

Preset State:

Not affected by (IP).

PRESET USER

restores the default menu for the user softkeys, which consists of the following softkeys:

DEFINE USR KEY

RECALL USER

SAVE USER

Note The user-softkey menu might contain softkeys you wish to keep, such as softkeys that execute scalar measurements or diagnostic routines. Do not execute PRESET USER if you want to keep the current menu of user softkeys.

Functional Type:

user-defined

Firmkey Access:

Misc

Preset State:

Not affected by (IP).

P STATE On Off

(protect state) protects the contents of all state-register files. When set to on, none of the files can be altered or deleted, except during some programming applications.

Instrument preset does not affect the setting of the protect state function.

Functional Type:

instrument-state

Firmkey Access:

Traces

Preset State:

Not affected by (IP).

PURGE FILE

erases files from internal or external memory.

To erase a file, first identify the entry number of the file by viewing the catalog of user-memory. In the catalog, the entry numbers are to the left of the files, in ascending order (see Figure 4-6). Follow this procedure:

1. View the catalog of user memory. Press `Misc`, `MORE`, `catalog & MSI`.
2. Press `PURGE FILE`, enter the entry number with the numeric keypad, then press `ENTER`.

Functional Type:

memory-related

Firmkey Access:

`Traces`

Preset State:

Off

PWR AVG On Off

Control video averaging of the power meter value.

The PWRAVG command does for power meter readings what the VAVG command does for traces. The main difference is the operation during single sweep mode. A TS during single sweep mode will not cause the power meter average counter to be reset, nor will the power meter average count affect the number of sweeps taken.

Functional Type:

power-meter

Firmkey Access:

`Amptd`

Preset State:

Off

PWR BAR On Off

turns on and off the display of the power bar at the left-hand side of the display screen and the average-power readout annotation. A lightwave signal path must be selected. The power bar is an analog display of the average optical power being measured.

CAUTION Inaccurate signal trace measurements can occur if HSWP IN/OUT on the HP 70810B lightwave section is not connected to HSWP IN/OUT on the HP 70900B local oscillator source.

For a lightwave signal analyzer, the power-bar function is automatically enabled when the analyzer is switched on, a lightwave signal path is selected, or an instrument preset is performed.

The power-bar readout value does not automatically change when switching the signal trace between optical mode and electrical mode. The power bar can be set to readout in optical units or electrical units using the `PWR MTR OptElec` softkey.

Functional Type:

power-meter

Firmkey Access:

`Amptd`

Preset State:

Off

PWR MTR OptElec

selects either optical units or electrical units for power meter annotation.

Functional Type:

power-meter

Firmkey Access:

`Amptd`

Preset State:

Elec

PWR STP AutoMan

(source power step) sets the power step-size for the SRC PWR On Off, PWR SWP On Off, and SRC PWR OFFSET softkeys. The power step-size can be set to a specific value between ±300 dB.

When automatic mode is selected, the step size is automatically set to the value of the LOG dB/DIV softkey. Selecting manual mode, or entering a step-size value, allows the power step-size to be set manually.

Use the numeric keypad to enter a power step-size value and terminate the entry with the dB softkey. The ▲ and ▼ step keys change the power step-size in a 1, 2, 5, 10 sequence. The knob changes the power step-size continuously between ±300 dB.

Functional Type:

tracking generator

Firmkey Access:

State

Preset State:

Auto

PWR SWP On Off

(source power sweep) works in conjunction with the SRC PWR On Off softkey to sweep the amplitude level of the source output.

The source power function determines the amplitude level at the beginning of the sweep. The power sweep function determines the amplitude level at the end of the sweep, relative to the beginning of the sweep. For example, if SRC PWR On Off and PWR SWP On Off are set to −21 dBm and −10 dBm, respectively, the source sweeps from −21 dBm to −11 dBm. Therefore, the maximum calibrated sweep range is 10 dB. When ON is selected, or a power-sweep value is entered, the power sweep function is automatically turned on. Power sweep may be turned on to the current amplitude value or turned off directly.

Instrument preset sets the power-sweep value to 0 dB and OFF.

Use the numeric keypad to enter a power-sweep value between ±300 dB and terminate the entry with the dB softkey. The front panel knob can be used to make small changes to the power-sweep value.

The ▲ and ▼ step keys change the power-sweep value in step increments that have been determined by the PWR STP AutoMan softkey.

`PWR SWP On Off`

Functional Type:

tracking generator

Firmkey Access:

`State`

Preset State:

Off

RB/SPAN RATIO

specifies the ratio between the resolution bandwidth and span settings.

When the resolution bandwidth is coupled, the spectrum analyzer automatically selects a particular resolution bandwidth. The ratio is determined as follows:

resolution bandwidth = span × N

The preset value for N is 0.01. Use `RB/SPAN RATIO` to select another value for N between 10^{-100} and 10^{+100}.

Functional Type:

bandwidth

Firmkey Access:

`BWSwp`

Preset State:

0.010

RBW AMP On Off

disable the amplitude-correction factors to the local oscillator. The corrections are disabled when the softkey is set to off.

These corrections improve the amplitude accuracy of displayed measurement results by compensating for irregularities in the IF-section, resolution bandwidth filters.

Functional Type:

calibration

Firmkey Access:

Amptd

Preset State:

On (correction factors)

RBW FREQ On Off

disable the frequency-correction factors to the local oscillator. The corrections are disabled when the softkey is set to off.

These corrections improve the frequency accuracy of displayed measurement results by compensating for irregularities in the IF-section, resolution bandwidth filters. Set the softkey function to off to eliminate the frequency correction and improve the frequency accuracy of the source output available at the front panel of the tracking-generator module, especially when using resolution bandwidths of 10 kHz or greater.

Functional Type:

calibration

Firmkey Access:

Amptd

Preset State:

On

READ AutoMan

is set to manual whenever the FREQ, PERIOD, SWPTIME, or 1/T softkeys are pressed. Set READ AutoMan to automatic, or press (INSTR PRESET), to return the marker readout to normal operation.

Functional Type:

marker

Firmkey Access:

Marker

Preset State:

Auto

recall

accesses the memory-retrieval softkey functions.

Functional Type:

memory-related

Firmkey Access:

Traces

Preset State:

Not affected by (IP).

recall from...

accesses the softkey functions that select a memory device or modify existing files.

Functional Type:

memory-related

Firmkey Access:

Traces

Preset State:

Not affected by (IP).

RECALL LIMIT

loads the contents of a limit-line file into the limit-line table, over-writing any existing table entries.

RECALL LIMIT fetches limit-line parameter files from the currently selected user memory. To select a user-memory area for recall of limit-line parameters, select one of the following softkeys accessed by pressing the catalog & MSI softkey.

- HP-MSIB CARD
- HPIB DISK
- INTRNL MEMORY

To recall a file, press RECALL USER, enter the file number using the numeric keypad, then press ENTER.

Functional Type:

memory-related and limit-line

Firmkey Access:

Traces

Preset State:

Off

RECALL MEMORY

loads the contents of a program file into internal memory or reserved memory.

Functional Type:

memory-related

Firmkey Access:

`Traces`

Preset State:

Off

RECALL STATE

reconfigures the analyzer into a state that has been saved in a state-register file. Files are recalled from the currently selected user memory.

To select a user-memory area, press `Misc`, `MORE`, `catalog & MSI`, then select one of the following softkeys.

- `HP-MSIB CARD`
- `HPIB DISK`
- `INTRNL MEMORY`

To recall a file, press `RECALL STATE`, enter the file number using the numeric keypad, then press `ENTER`.

Functional Type:

instrument-state

Firmkey Access:

`Traces`

Preset State:

Off

RECALL TRACE A

loads the contents of a trace file into trace A. If you wish to retain the loaded data in trace A, you must prevent the updating of trace A. The

- Activate single-sweep mode. Press BW, Swp, SINGLE SWEEP.
- Place trace A in view mode. Press Traces, STORE A, or verify that the VIEW-A/BLANK-A softkey is set to VIEW A.

Functional Type:

memory-related

Firmkey Access:

Traces

Preset State:

Off

RECALL USER

clears the current menu of user softkeys, then loads the contents of a user-softkey file into the user-softkey menu. RECALL USER fetches files from the currently selected user memory.

To select a user-memory area, press Misc, MORE 1 of 3, catalog & MSI, then select one of the following softkeys.

- INTRNL MEMORY
- HP-MSIB CARD
- HPIB DISK

To recall a file, press RECALL USER, enter the file number using the numeric keypad, then press ENTER.

The operation of RECALL USER and RECALL USERKEY are identical.

Functional Type:

user-defined and memory-related

Firmkey Access:

Misc

Preset State:

Off

RECALL USERKEY

clears the current menu of user-defined softkeys, then loads the contents of a user-key file into the user-key menu. To select a user-memory area, press `Misc`, `MORE`, `catalog & MSI`, then select one of the following softkeys.

- `HP-MSIB CARD`
- `HPIB DISK`
- `INTRNL MEMORY`

To recall a file, press `RECALL USERKEY`, enter the file number using the numeric keypad, then press `ENTER`. The operation of `RECALL USERKEY` and `RECALL USER`, are identical.

Functional Type:

memory-related and instrument-state

Firmkey Access:

`Traces`

Preset State:

Off

-> REF

(marker to reference level) sets the reference level equal to the marker amplitude. This process moves the marker and the trace point it marks to the reference level.

Functional Type:

marker

Firmkey Access:

`Marker`

Preset State:

Markers Off.

REF LVL

(reference level) specifies the absolute-amplitude value of the graticule. The reference level is the top graticule line after (INSTR PRESET) is pressed or during linear mode.

The input-attenuator setting is normally coupled to the reference-level setting. See the REF LVL POSN softkey description.

See also the ATTEN AutoMan softkey description.

Functional Type:

amplitude

Firmkey Access:

Amptd

Preset State:

−10 dBm for spectrum analyzer and 0 dBm for lightwave.

REF LVL POSN

repositions the reference level on any of the major graticule lines during logarithmic mode. The top line position is 10 and the bottom line position is 0. When the reference level is not at the top graticule line, arrows at the sides of the display indicate the reference-level position.

See the REF LVL softkey description.

Functional Type:

amplitude

Firmkey Access:

Amptd

Preset State:

At top of 10th division.

RELATIV On Off

specifies whether the parameters in the limit-line table represent absolute amplitude and frequency values or are values relative to the reference-level and center-frequency settings.

Functional Type:

limit-line

Firmkey Access:

`Misc`

Preset State:

Off

REL LEFT

activates marker #2 and positions it on a trace in the current amplitude terms, relative to the position of marker #1. `REL LEFT` makes marker #1 a reference marker and marker #2 an active, amplitude-left marker.

`REL LEFT` activates the relative-marker mode, which displays two markers and calculates the frequency and amplitude difference between them. When this mode is active, the marker annotation shows the amplitude difference between the amplitude-left and reference markers. If the vertical scale of the display is logarithmic, the difference between the markers is in decibel units. If the vertical scale is linear, the difference between the markers is a ratio.

Functional Type:

marker

Firmkey Access:

`Marker`

Preset State:

Markers off.

REL PWR On Off

(relative power marker) is a marker function that calculates the difference between the signal amplitude at the marker and the average optical power. A lightwave signal path must be selected.

This value is displayed in the active function area in either linear or log (dB) units. When in log mode, the signal amplitude is represented as a specific number of decibels above or below the average optical power level. When either linear scale or watt units is selected, the relative power marker value is displayed as a linear ratio. A numeric value is displayed, followed by an X, just below the frequency readout for the marker. The displayed ratio is the marker amplitude value divided by the average optical power. The ratio can be converted to a signal modulation percentage by multiplying the ratio value by 100.

When the average power is too low, the user message Insufficient average power is displayed. If the relative power marker function is the current active function, the message UNDER RANGE is also displayed.

Use the numeric keypad to enter a value for the relative-power-marker position. The ▲ and ▼ step softkeys change the marker position by one horizontal graticule division. Use the front panel knob to make small changes to the marker position.

If REL PWR On Off is on and the signal path is changed to an RF path, the marker normal function is activated.

Functional Type:

marker

Firmkey Access:

Marker

Preset State:

Off

REL RIGHT

activates marker #3 and positions it on a trace in the current amplitude terms, relative to the position of marker #1. REL RIGHT makes marker #1 a reference marker and marker #3 an active, amplitude-right marker. REL RIGHT activates the relative-marker mode, which displays two markers and calculates the frequency and amplitude difference between them. When this mode is active, the marker annotation shows the amplitude difference between the amplitude-right and reference markers. If the vertical scale of the display is logarithmic, the difference between the markers is in decibel units. If the vertical scale is linear, the difference between the markers is a ratio.

REL RIGHT

Functional Type:

marker

Firmkey Access:

Marker

Preset State:

Markers off.

REPLACE or...

Programming Function When being used as a programming function, this menu key selects the insert-editing function for the programming text on the data line at the bottom of the display. When the REPLACE or... is present, characters can be replaced in the programming text that is displayed on the data line at the bottom of the display.

Use the ▲ and ▼ step keys to position the entry window under the character in the data line that is to be replaced. Use the front panel knob to select the desired character from the character list and replace the original character using the SELECT CHAR softkey.

To execute the modified program, press the COMMAND softkey.

Display Function When being used as a display function, this menu key allows characters to be replaced in the text that appears to the left of the TITLE entry window at the bottom of the display.

Use the step keys to position the entry window on the TITLE data line under the character that is to be replaced. Use the front panel knob to select the desired character from the character list, and replace the original character, using the SELECT CHAR softkey.

To display the modified text in the title line at the top of the display, press the ENTER LINE softkey.

When the REPLACE or... softkey is pressed, it selects the insert-editing function at the TITLE entry-window position.

Functional Type:

programming-related and display

Firmkey Access:

Misc

Preset State:

Off

RES BW AutoMan

(resolution bandwidth) specifies the width of the resolution bandwidth filter and controls the coupling between the resolution bandwidth and span settings. When a new resolution bandwidth value is selected, the functions are uncoupled and the resolution bandwidth softkey setting switches to manual. When they are uncoupled, the resolution bandwidth uncoupled indicator appears, as shown in Figure 4-8. Set the softkey to automatic to reestablish coupling.

See the RB/SPAN RATIO softkey description.

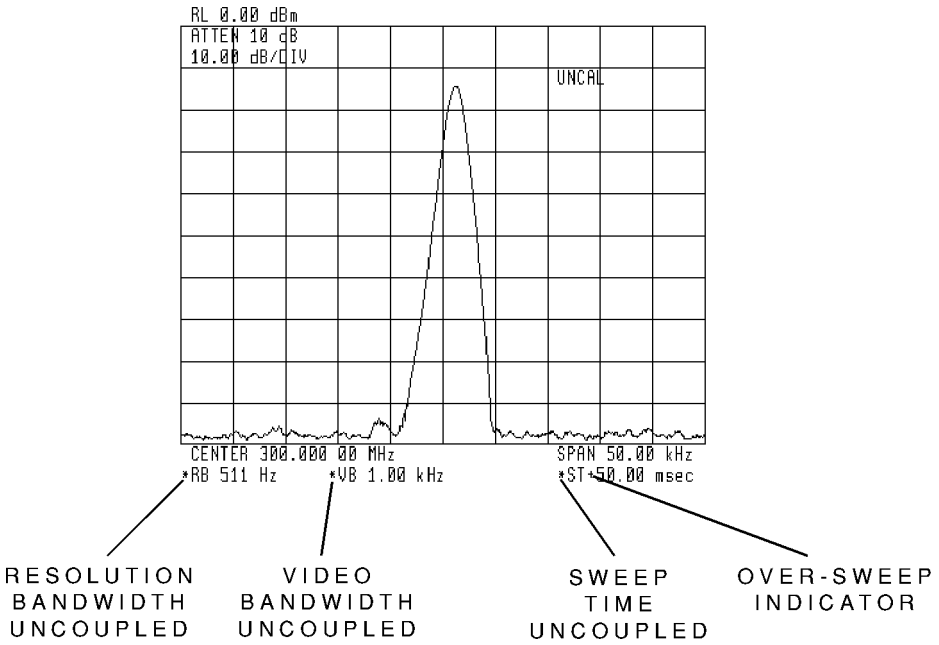

Figure 4-8. Coupling and Accuracy Indicators

Functional Type:

bandwidth

Firmkey Access:

BWSwp

Preset State:

Auto

RESTART

Breaks all links and does a system reconfiguration.

Functional Type:

service-related

Firmkey Access:

`Misc`

Preset State:

Off

RIGHT PEAK

moves the marker to the closest signal peak of higher frequency. Figure 3-1 illustrates the use of the marker softkey function.

See the `PEAK EXCURSN` softkey description to learn about the related instrument settings that increase the effectiveness of the right-peak marker.

Functional Type:

marker

Firmkey Access:

`Marker`

Preset State:

Markers off.

RIGHT PIT

Selects the next right pit.

Functional Type:

marker

Firmkey Access:

Marker

Preset State:

Off

RIN SYS On Off

(relative intensity noise marker) turns the RIN marker function on and off. The marker measures the noise fluctuations at the optical input, relative to the average optical power in electrical units. A lightwave signal path must be selected.

Note A down loadable program (DLP), RINLasr, is provided with each configured lightwave signal analyzer. It provides enhanced relative-intensity-noise (RIN) measurements. Press the (USER) key to access the RINLasr softkey on the user-softkey menu.

This marker function calculates the difference in electrical dB between the rms noise level at the marker position and the average optical power. Utilizing the marker noise function, the noise level of the active marker is read out and normalized to a 1 Hz bandwidth. The average power value is then subtracted from the value of the marker noise. The resulting value is displayed in electrical dB units below the frequency readout for the marker.

The units annotation for the relative-intensity-noise marker is not affected by the units chosen for the power meter or the trace.

When the average power is too low, the user message Insufficient average power is displayed. If the RIN marker function is the current active function, the message UNDER RANGE is also displayed.

Use the numeric keypad to enter a relative-intensity-noise value for the marker position. Use the (▲) and (▼) step softkeys to change the marker position by one horizontal graticule division or make small changes using the front panel knob.

If RIN SYS On Off is on and the signal path is changed to an RF path, the marker normal function is activated.

`RIN SYS On Off`

Functional Type:

marker

Firmkey Access:

`Marker`

Preset State:

Off

ROM VERSION

displays the date code of the local oscillator read-only memory (ROM) chip. The spectrum analyzer measurement capabilities and compatibility with modular-measurement-system modules or software varies with the ROM-version date code.

Functional Type:

service-related

Firmkey Access:

`Misc`

Preset State:

Not affected by (IP).

RSPSVTY AutoMan

(responsivity, automatic or manual mode) allows manual entry of a responsivity value for the lightwave section.

This function is available only when lightwave electrical mode is selected by using the `LW MODE OptElec` softkey.

Responsivity is a measure of the lightwave section's voltage output per unit of optical power input (units = volts/watt) at the reference plane of the photodiode output. A typical value of responsivity is 40 volts/watt measured at the output of the photodiode.

When automatic mode is selected, the factory-calibrated value is used. When the calibrated wavelength is changed using one of the lambda softkeys, the responsivity softkey is reset to automatic.

When manual mode is chosen, the user's selected value of responsivity is used. This does change the receiver responsivity to display the electrical power which would result from a receiver with responsivity equal to the selected value.

When manually changing the responsivity value, use the numeric keypad to enter a new value and the V/W softkey to terminate the entry. Use the ▲ and ▼ step softkeys to change the responsivity value in increments or make small changes using the front panel knob.

Functional Type:

lightwave

Firmkey Access:

Amptd

Preset State:

Auto

SAMPLE

displays the instantaneous signal level detected at the beginning of the sample period.

Sample detection is useful during zero-span mode when measuring modulation with PERSIST On Off set to on.

Pulse responses less than one sample interval might not appear, depending on the span setting. Figure 4-9 is an example of signal loss when using the sample function with the frequency span set too wide. Compare Figure 4-6 and Figure 4-9. The only difference in instrument setting between the two figures is that the detector mode has been switched from normal to sample.

The video-averaging and marker-noise softkeys, VID AVG On Off and MKNOISE On Off, also activate sample detection.

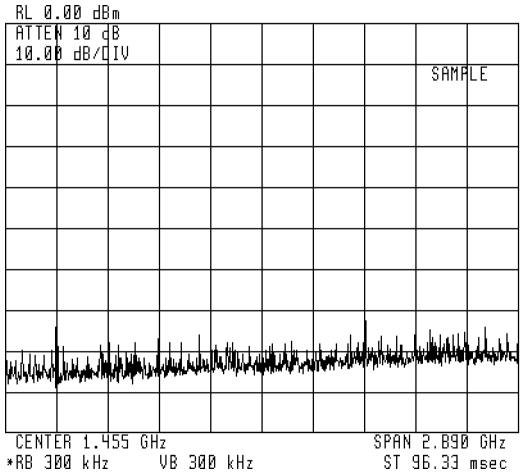

Figure 4-9. Measurement Using Sample-Peak Detection

SAMPLE

Functional Type:

signal-detection

Firmkey Access:

Traces

Preset State:

Off (detection)

---

save

accesses the memory-storage softkey functions.

Functional Type:

memory-related

Firmkey Access:

Traces

Preset State:

Not affected by (IP).

SAVE LIMIT

stores the contents of the limit-line table in a limit-line file. Files are stored in the currently selected user memory. When power is applied, internal memory is selected.

To select a user-memory area, press Misc, MORE, catalog & MSI, then select one of the following softkeys .

- HP-MSIB CARD
- HPIB DISK
- INTRNL MEMORY

To save a limit-line file, press SAVE LIMIT, enter a number from the numeric keypad, then press ENTER.

Functional Type:

memory-related and limit-line

Firmkey Access:

Traces

Preset State:

Off

SAVE MEMORY

stores all non-ASCII, internal-memory entries in a program file into external memory only. These include user-defined traces, variables, functions, on-end-of-sweep algorithms, and amplitude-correction factors.

See Table 4-2 under the softkey description for catalog & MSI.

Functional Type:

memory-related

Firmkey Access:

Traces

Preset State:

Off

SAVE STATE

saves the current instrument state in a state-register file. Files are stored in the currently selected user memory. When power is applied, internal memory is selected.

To save a state-register file, press SAVE STATE, enter a number from the numeric keypad, then press ENTER.

To select a user-memory area, press Misc, MORE, catalog & MSI, then select one of the following softkeys.

- HP-MSIB CARD
- HPIB DISK
- INTRNL MEMORY

SAVE STATE

Functional Type:

memory-related and instrument-state

Firmkey Access:

Traces

Preset State:

Off

---

save to...

accesses the softkey functions that select a memory device or modify existing files.

Functional Type:

memory-related

Firmkey Access:

Traces

Preset State:

Not affected by (IP).

SAVE TRACE A

stores trace A in a trace file. If desired, use single-sweep mode to capture one complete sweep of trace data before storing the file.

Functional Type:

memory-related

Firmkey Access:

Traces

Preset State:

Off

SAVE USER

stores the current menu of user softkeys in a user-softkey file. Files are stored in the currently selected user memory. When power is applied, internal memory is selected.

Note User definition of traces, variables and functions override standard commands of the same name. No error message is generated if a user-defined name conflicts with a standard command name.

To select a user-memory area, press Misc, MORE, catalog & MSI, then select one of the following softkeys.

- INTRNL MEMORY
- HP-MSIB CARD
- HPIB DISK

To save a user-softkey file, press SAVE USER, enter a number from the numeric keypad, then press ENTER.

The operation of SAVE USER and SAVE USERKEY are identical.

See the EDIT FUNCDEF softkey description.

Functional Type:

user-defined

Firmkey Access:

Misc

Preset State:

Off

SAVE USERKEY

stores the current menu of user-defined softkeys in a user-key file.

The operation of SAVE USERKEY and SAVE USER, accessed under the Misc softkey, are identical.

`SAVE USERKEY`

Functional Type:

memory-related and instrument-state

Firmkey Access:

`Traces`

Preset State:

Off

`select adc`

switches between the internal and external video-processing paths.

The `select adc` softkey accesses a menu that chooses the available analog-to-digital converters in your system. To select a different converter, press `select adc`, then make a selection by pressing one of the listed softkeys. The modules are displayed in a sequence that is dependent on the HP-MSIB address of each converter module. Use the digitizer analog-to-digital converter to obtain faster sweep times when the spectrum analyzer frequency span is zero.

During normal operation, the video signal is routed to the analog-to-digital converter (ADC) in the HP 70900B local oscillator source for processing.

If the analyzer system contains an analog-to-digital converter module in addition to an HP 70900B local oscillator source, the `select adc` softkey is present. Use `select adc` to route the video signal to the desired converter, such as an HP 70700A digitizer. When an HP 70700A digitizer is used for this purpose, it must be under the control of the local oscillator module.

See *HP 70000 Modular Spectrum Analyzer Installation and Verification Manual* for configuration instructions.

Functional Type:

signal-path

Firmkey Access:

`State`

Preset State:

Not affected by (IP).

SELECT CHAR

Programming Function When being used as a programming function, this menu key enters into the data line any character listed in the character list, which appears at the left side of the display when COMMAND is pressed.

The ▲ and ▼ step keys move the entry window in the data line and the front panel knob selects which character from the character list is entered.

Display Function When being used as a display function, this menu key enters into the TITLE entry window (at the bottom of the display) any character listed in the character list, which appears at the left side of the display when TITLE is pressed.

Use the step keys to move the entry window along the TITLE data line. The knob selects which character from the character list is to be entered into the entry window.

Enter the desired message between the single quotes in the TITLE entry window. If characters are entered outside the quotes, delete them or press TITLE to begin again.

The SELECT CHAR softkey is active when INSERT or... or REPLACE or... is present.

Functional Type:

programming-related and display

Firmkey Access:

Misc

Preset State:

Off

select input

accesses a softkey menu that lists the available input ports. To activate an input port, press select input, then press an input-port softkey to activate the port. The softkey is present only if more than one input port is available.

Note For a lightwave signal analyzer, the lightwave signal path has been calibrated at the factory and does not require additional calibration. However; the RF or microwave signal path through an HP 70810B lightwave section is calibrated using the system calibration softkey functions.

Whenever a new input port is selected for measurements, the analyzer should be calibrated with the CAL ALL softkey.

The order of the input ports displayed in the softkey menu is the same as the order of modules along the signal path.

Notice that each input-port softkey is numbered. For example, if the IN 1 70908A softkey is displayed, it indicates that an HP 70908A RF section is designated as input port 1 and is the

first module in the signal path (another example is the IN 1 LW 70810A softkey). The modules are displayed in a sequence that is dependent on the HP-MSIB address and module model designation of each module. The order of input ports is sorted by the module address, column address before row address, in ASCII order. If there are two input ports at one HP-MSIB module address, the module model number is also used to determine the order of input ports. For example, an HP 70810B lightwave section sets the system input-port order so that its OPTICAL INPUT is input 1 and its RF INPUT is input 2.

Refer to *HP 70000 Modular Spectrum Analyzer Installation and Verification Manual* for information about the correct HP-MSIB module addresses to use for proper spectrum analyzer and lightwave signal analyzer system configuration.

The input-port number is required during certain programming situations. Checking the input-port number on the softkey label is a simple way to determine the input-port number.

Note Changes in hardware configuration or firmware revision can affect the displayed numbering of the system inputs. When programming the commands INPUT, INPUTMOD, and MODADD can be used to verify the proper input selection.

Functional Type:

signal-path

Firmkey Access:

State

Preset State:

Not affected by [IP].

SERVICE REQUEST

enables the service request mode by setting the message bit in the status-byte register true. An unconditional controller interrupt is sent on the HP-IB. The controller must be set to receive a service request. This function emulates the Shift R function that is available in the HP 8566B spectrum analyzer.

Functional Type:

service-related

Firmkey Access:

Misc

Preset State:

Off

show states

access the softkeys that provide the current instrument-state information.

Functional Type:

instrument-state

Firmkey Access:

Traces

Preset State:

Not affected by (IP).

SIG ID AMPTD Δ

(signal identification amplitude delta) specifies the amplitude difference between the marked signal and signals tested as its image or harmonic. Its preset value is 10 dB.

Use the SIG ID AMPTD Δ softkey for the image-identification method only. The setting of the softkey can affect whether image method can find the signal.

Functional Type:

signal-identification

Firmkey Access:

Freq

Preset State:

10 dB for spectrum analayzer, but not available in optical mode.

SIG ID -> CF

places the active marker on the identified real signal and centers it on the display. If the identified signal is in a different frequency band than the originally tested signal, and if the bands are harmonically locked, `SIG ID -> CF` is ineffective.

Functional Type:

signal-identification

Firmkey Access:

`Freq`

Preset State:

Off for spectrum analyzer, but not available in optical mode.

SIG ID MAN OFF

selects automatic or manual mode. Its preset state is automatic mode.

Functional Type:

signal-identification

Firmkey Access:

`Freq`

Preset State:

Off for spectrum analyzer, but not available in optical mode.

sig id options

accesses the signal-identification softkey functions.

For an HP 71400C lightwave signal analyzer or HP 71401C lightwave signal analyzer, if a lightwave signal path has been selected, the softkey and its related softkey functions are not available.

Functional Type:

signal-identification

Firmkey Access:

Freq

Preset State:

Not affected by (IP).

SIGNAL IDENT

executes a signal-identification routine using either the image or shift method. Instrument preset activates the image method.

Functional Type:

signal-identification

Firmkey Access:

Freq

Preset State:

Off for spectrum analyzer, but not available in optical mode.

SIG TRK LIMIT

(signal-tracking limit). Use the tracking-limit function when tracking a signal that is close to another signal of similar amplitude. During the signal-tracking process, the spectrum analyzer continuously reevaluates the marker amplitude to see if the marker is still marking the same signal. Otherwise, the marker may move to an adjacent signal during the tracking process. The tracking-limit softkey controls the amplitude variation tolerated by the signal-tracking functions. The tracking limit can vary from 0 to 300 dB. The preset tracking limit is 5 dB.

Functional Type:

marker

Firmkey Access:

`Marker`

Preset State:

5 dB

SIG TRK On Off

(signal-track on/off) keeps the marker and the trace point it marks at the center of the display. Use signal tracking while changing spans or monitoring drifting signals.

Functional Type:

marker

Firmkey Access:

`Marker`

Preset State:

Off for spectrum analyzer, but not available in optical mode.

SINGLE SWEEP

initiates one sweep if the trigger conditions are met.

Functional Type:

sweep and trigger

Firmkey Access:

BWSwp

Preset State:

Off

SPACE

Programming Function When being used as a programming function, this menu key inserts a space into the programming text on the data line.

Use the ▲ and ▼ step keys to move the entry window along the text in the data line.

Display Function When being used as a display function, this menu key enters a space between characters in the TITLE entry window at the bottom of the display.

Functional Type:

programming-related and display

Firmkey Access:

Misc

Preset State:

Off

SPAN

changes the analyzer measurement range symmetrically about the center frequency. To determine the frequency span per division, divide the span by 10.

When the span is set to 0 Hz, the horizontal axis of the display represents time instead of frequency. A span of 0 Hz (called zero span mode) configures the analyzer as a fixed, tuned receiver and is often used to display modulation waveforms. It is a good practice to reduce the frequency span by small increments with the step keys. If the frequency span is changed by large increments, the position of displayed signals can change appreciably, or even move off of the display.

When changing the frequency span by larger increments, use the signal-tracking function to keep the desired signal at the center of the display.

Functional Type:

frequency

Firmkey Access:

`Freq`

Preset State:

Set to maximum measurement range.

SRC ATN AutoMan

(source attenuator) allows the source attenuator level of an HP 70300A RF tracking generator to be automatically or manually changed. The source attenuator increases the power level range from a range of −10 to −21 dBm to a range of −10 to −91 dBm.

In automatic mode, the source attenuator is controlled automatically as required to produce the requested source output power. For most applications, leave the `SRC ATN AutoMan` softkey in automatic mode.

When manual mode is selected, attenuation in increments of 10 dB is available; however, the source power is limited for any given source attenuator setting. At instrument preset, the source attenuator is set to 0 dB in automatic mode.

Use the numeric keypad to enter an attenuation level between 0 and 70 dB (in 10 dB increments). When an unacceptable value is entered, the instrument defaults to the closest allowed value.

The (▲) and (▼) step keys change the attenuation level in 10 dB steps, from 0 to 70 dB.

The front panel knob changes the attenuation level in 10 dB steps.

Functional Type:

tracking generator

Firmkey Access:

State

Preset State:

Auto

SRC OSC INT EXT

(source oscillator) selects the 21.4 MHz oscillator that mixes with the spectrum analyzer local oscillator to produce the source output at the RF OUTPUT port on the tracking generator. Set SRC OSC INT EXT to internal to activate the 21.4 MHz oscillator in the tracking generator module. Select EXT to mix with an external oscillator connected to the 21.4 MHz INPUT port.

With external source oscillation, the tracking generator output may be offset up to ±10 MHz. A modulated external 21.4 MHz source will put modulation on the RF OUTPUT of the tracking generator. (With external oscillators, tracking adjustments are not functional.)

Functional Type:

tracking generator

Firmkey Access:

State

Preset State:

INT (for tracking generator)

SRC PWR OFFSET

(source power offset) allows a user-determined value to be added to the requested source-power output-level readout, which enables the user to calibrate the source output. This does not change the actual signal level produced by the tracking generator, nor does it affect the displayed trace.

An offset value remains in effect until turned off. To eliminate an offset, enter a value of zero. The source power offset is preset to 0 dB at instrument preset.

Note The display screen does not indicate whether source power offsets are active.

Use the numeric keypad to enter a power offset value between ±300 dB. If an unacceptable value is entered, the instrument defaults to the closest allowed value. The ▲ and ▼ step keys change the offset value in step-sizes set by the `PWR STP AutoMan` softkey. The front panel knob changes the offset value continuously.

Functional Type:

tracking generator

Firmkey Access:

`State`

Preset State:

0 dB (for tracking generator)

SRC PWR On Off

(source power, on or off) sets the source power level at the RF OUTPUT port on the front panel of the tracking generator.

At instrument preset, the tracking generator power level is set to −10 dBm.

Use the numeric keypad to enter a specific power level.

The ▲ and ▼ step keys change the power level in step-sizes set by the `PWR STP AutoMan` softkey.

The knob changes the power level continuously.

Functional Type:

tracking generator

Firmkey Access:

State

Preset State:

Off

START

sets the start frequency. The resolution of the frequency readout decreases with an increase in the span setting.

See the RB/SPAN RATIO softkey description.

Functional Type:

frequency

Firmkey Access:

Freq

Preset State:

Set to beginning of measurement range.

STATE

lists the current state of system-level parameters under operator control. The summary includes frequency ranges, bandwidth settings, offsets, and external-mixing parameters. It also lists the identification and serial numbers, and firmware version date of the system-controlling module, the HP 70900B local oscillator source. Figure 4-10 illustrates an example of the information displayed after pressing the STATE softkey.

For serial-number storage instructions, refer to the description for the SER command in the *HP 70000 Modular Spectrum Analyzer Programming Manual*.

STATE

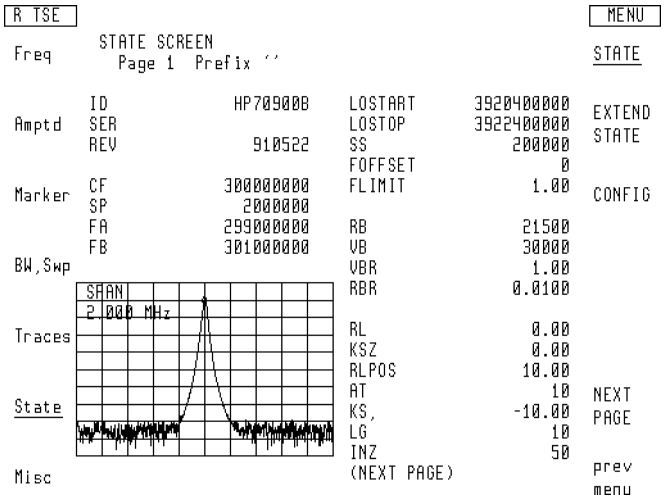

Figure 4-10. STATE Displays Parameters Under Your Control

Functional Type:

instrument-state

Firmkey Access:

Traces

Preset State:

On

STEP

executes each successive program command, one at a time.

Functional Type:

programming-related

Firmkey Access:

Misc

Preset State:

Off

STM RSP MIL Cpl

(stimulus response maximum input level coupling) this stimulus response mode is identical to standard stimulus response mode with one exception: stimulus response mode, with maximum input level coupling, allows system gains to change (such as with a reference level change).

Functional Type:

tracking generator

Firmkey Access:

State

Preset State:

Off

STM RSP On Off

(stimulus response measurement mode) optimizes system operation for stimulus-response measurements. When STM RSP On Off is turned on, it activates the stimulus-response automatic sweep time (which is typically valid for devices when the frequency span of the system is less than 20 times the bandwidth of the device). If trace math softkeys A–B -> A or A–C -> A are executed during the stimulus-response mode, measurement results are displayed in relative amplitude mode. Measurement results are relative to references stored in Trace B or Trace C. References may be stored using the following source softkeys: STORE THRU->B, STORE OPEN->C, or AVERAGE SHRT->C.

When the system enters relative amplitude mode, the reference level is set to 0 dB and the annotation for the following softkeys is displayed in dB units: Display Line DSP LIN On Off, Reference Level REF LVL, and Threshold THRESHD On Off.

Functional Type:

tracking generator

Firmkey Access:

State

Preset State:

Off

STOP

sets the stop frequency. The resolution of the frequency readout decreases with an increase in the span setting.

See the RB/SPAN RATIO softkey description.

Functional Type:

frequency

Firmkey Access:

Freq

Preset State:

Set to end of measurement range.

STORE A

stops the updating of the Trace A, stores the trace data in reserved memory, then activates the VIEW A/BLANK A softkey. Trace B and Trace C have a corresponding store softkey function.

If necessary, press CLEAR WRT A to reactivate the STORE A key. The (I-P) or Traces softkey also activates the STORE A key.

Functional Type:

active-trace processing

Firmkey Access:

BWSwp

Preset State:

Off

STORE OPEN ->C

(store reference, open) works in conjunction with the AVERAGE SHRT->C softkey to reduce mismatches and directivity effects for reflection measurements. This then produces a more accurate frequency-response reference trace.

The STORE OPEN->C softkey is used with the AVERAGE SHRT->C and A–C->A softkeys in the normalization process. The STORE OPEN->C softkey stores an open calibration in Trace C. Then, AVERAGE SHRT->C averages short-circuit data with the open-circuit data. Finally, the device under test is inserted and A–C->A is activated to subtract Trace C and view the normalized trace. Normalization improves measurements by allowing errors that existed before the device was connected to be subtracted out. Once the open is stored in Trace C, Function executed appears on the display. If the frequency span or the start and stop frequencies are changed after the open has been stored, the calibration trace will no longer contain a valid reference for the measurement conditions and a new reference must be obtained. The reference level, reference level position, and vertical log scale may be changed without affecting the reference.

Consider the following operating hints when using the STORE OPEN ->C function.

- Press STORE OPEN->C to place data from Trace A (presumably the open-calibration data) into Trace C. This erases any data that was previously stored in Trace C.
- If AVERAGE SHRT->C is pressed before STORE OPEN->C, a Not stored, open 1st error message appears reminding you to store the open first.
- If STORE OPEN->C is pressed when A–C->A On Off is on, the Not stored; A–x->A on error message appears. The open calibration is not stored. A–C->A On Off must be in the OFF position.
- Use the STORE OPEN->C softkey to store a short when an open/short average is not required. In this case, connect the short and press STORE OPEN->C. Then connect the device under test and press A–C->A.

Functional Type:

tracking generator

Firmkey Access:

State

Preset State:

Off (for tracking generator)

STORE THRU->B

(store reference, through) is used in the normalization process for transmission measurements. Normalization improves measurements by allowing system errors such as frequency response and cable losses to be subtracted out.

Be sure that Trace A contains one complete sweep of measurement data for the through-reference before executing the STORE THRU->B softkey. Press STORE THRU->B to place the data from Trace A (presumably a through-trace) into Trace B. Function executed appears on the display. If the frequency span or the start and stop frequencies are changed after STORE THRU->B is executed, Trace B no longer contains a valid through-reference for the measurement conditions. A new through-calibration trace must be obtained and stored using the new frequency settings. (The reference level, reference level position, and vertical log scale can be changed and the trace will remain valid.)

Storing the through-connection saves correction factors that can later be subtracted out. This is sometimes referred to as "calibrating" the instrument setup.

Consider the following operating hints when using the STORE THRU->B softkey.

- Pressing STORE THRU->B erases any data previously stored in Trace B.
- If STORE THRU->B is pressed when A–B->A On Off is ON, the Not stored; A–x->A on error message appears. The through-calibration trace is not stored. A–B->A On Off must be in the OFF position.

Functional Type:

tracking generator

Firmkey Access:

State

Preset State:

Off (for tracking generator)

STP GAIN AutoMan

Control the first step gain in the signal path.

For some applications, it is desirable to have a high degree of control over the gain through the signal path. The input attenuation is already controllable by use of the AT command. The step gains in the path typically are automatically controlled and are set as appropriate depending upon the appropriate current system parameters (such as the desired reference level). (A step gain is defined as a programmable gain functional block with a label of “SG”.)

The SG command allows direct control of the step gains in the signal path. If there is more than one step gain in the signal path, the gain will be applied as late as possible in the signal path (toward the detector in preference to toward the mixer). Multiple step gains may be used to achieve the requested total step gain.

The SG information is part of the instrument state, so SAVES/RCLS will interact properly with this command.

An ’*’ annunciator will appear to the right of the RL annotation if the SG is not in AUTO.

The SG command is fully supported by the Compiled Instrument-C environment.

If SG is set explicitly, a warning “Possible compression” (warning # 16007) will be issued if the step gain total is too high for the detector.

Functional Type:

amplitude

Firmkey Access:

`Amptd`

Preset State:

Auto

SWPTIME

(sweep time) describes the marker position in terms of sweep time. The left side of the graticule corresponds to 0 seconds. The right side corresponds to the sweep time.

Functional Type:

marker

Firmkey Access:

`Marker`

Preset State:

Off

SWPTIME AutoMan

(sweep time automatic or manual) specifies the rate that the analyzer sweeps the current measurement range. During normal operation, the sweep time can be from 10 milliseconds to 1000 seconds.

Analyzer systems containing an HP 70700A digitizer can obtain faster sweep times.

During normal operation, the sweep time is coupled to the resolution bandwidth, video-bandwidth and span settings to yield optimum amplitude accuracy. When coupled, the sweep time changes as the resolution bandwidth, video bandwidth, and span change. Selecting a sweep time with `SWPTIME AutoMan` disrupts this coupling. The uncalibrated warning, `UNCAL`, appears on the display whenever the sweep time selected affects accuracy. Set `SWPTIME AutoMan` to automatic to reestablish coupling and accuracy. Coupling is also activated when (INSTR PRESET) is pressed.

See the `OVERSWP On Off` softkey description.

Functional Type:

sweep and trigger

Firmkey Access:

`BWSwp`

Preset State:

Auto

SYS COR AutoOff

(system correction, automatic or off) enables system specific amplitude-correction factors. The correction factors are matched by serial number to a single combination of RF, microwave, and lightwave modules installed in the system. Only selected systems have a factory generated system calibration.

When the system correction function is set to automatic, the amplitude correction factors for the system are used, if they are available. When modules are calibrated together for a system, the system correction function activates the correction factors based on the related module serial numbers. Automatic mode provides optimum performance for modules that have been calibrated together.

For example, when the system correction function is set to automatic for a lightwave signal analyzer, a combination of correction factors from the HP 70810B lightwave section and its related RF or microwave module are used.

When the system correction function is set to off, only the amplitude correction factors for an individual RF, microwave, or lightwave section are used. Selecting a signal path determines which module correction factors are enabled.

If the system contains individual RF or microwave modules, the individual module correction factors are used.

See the `select input` softkey description.

Functional Type:

calibration

Firmkey Access:

`Amptd`

Preset State:

Auto

THRESHD On Off

blanks all displayed trace information below an amplitude threshold level without altering stored trace data. This function is a visual aid only.

Manually specify the desired threshold level in dBm by using the numeric keypad, the ▲ and ▼ keys, or the front panel knob.

To display the entire trace again, set the `THRESHD On Off` softkey to off.

The threshold value that was entered manually will remain unchanged until a new value is entered or an instrument preset is performed.

Functional Type:

display

Firmkey Access:

`Misc`

Preset State:

Off, at –90 dBm.

TITLE

accesses a set of editing-function softkeys that display a message in the title line. The title line appears at the top of the display. See Figure 4-11 for the location of the character list, the TITLE entry window, and the title line. Use the ▲ and ▼ step keys to move the entry window left and right on the TITLE data line at the bottom of the display. Use the front panel knob to select a character from the character list.

Use the following editing softkeys to compose text in the TITLE entry window at the bottom of the display.

CLEAR TO END

DELETE CHAR

DELETE or...

ENTER LINE

INSERT or...

REPLACE or...

SELECT CHAR

SPACE

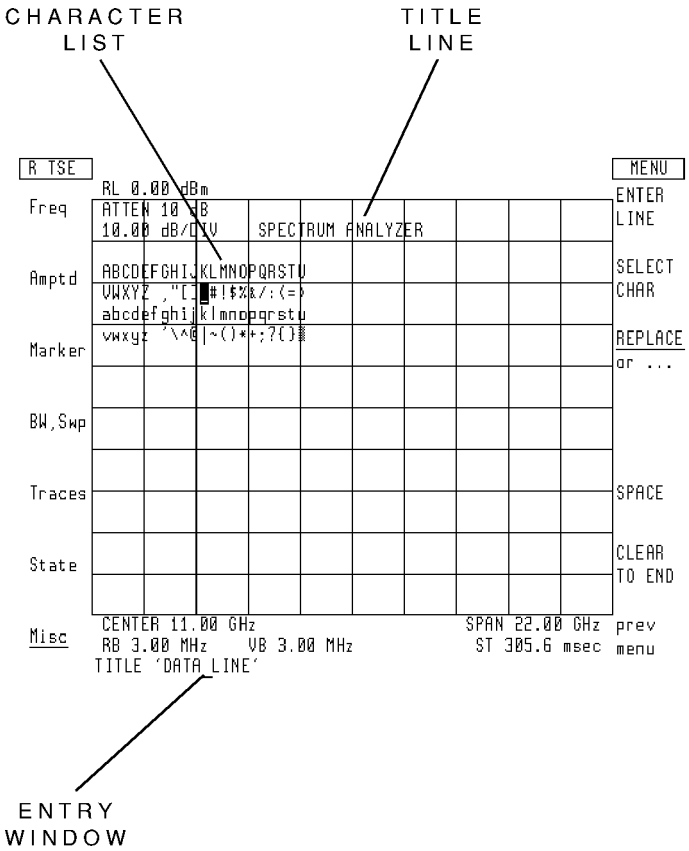

Figure 4-11. Title-Line and Title-Entry Window Positions

Functional Type:

display

Firmkey Access:

Misc

Preset State:

Blanks title.

---

trace A B C

selects the active trace for the trace-processing functions.

Functional Type:

active-trace processing

Firmkey Access:

BWSwp

Preset State:

A

TRACE LENGTH

varies the number of points in a trace from 3 to 1024. After pressing (INSTR PRESET), traces A, B, and C each have 800 points.

Functional Type:

active-trace processing

Firmkey Access:

BWSwp

Preset State:

Off

trace linmath

accesses linear math active-trace processing function softkeys.

Functional Type:

active-trace processing

Firmkey Access:

BWSwp

Preset State:

Not affected by IP.

trace logmath

accesses log math active-trace processing function softkeys.

Functional Type:

active-trace processing

Firmkey Access:

BWSwp

Preset State:

Not affected by IP.

trace norm

accesses the trace-normalization softkey functions.

Functional Type:

tracking generator

Firmkey Access:

State

Preset State:

Not affected by IP.

TRACE PRESET

resets the trace functions to a known state without affecting the analyzer measurement range. The trace preset function configures the analyzer as follows:

- Sets length of traces A, B, and C to 800.
- Sweeps and displays trace A. (Activates clear-write mode.)
- Blanks traces B and C.
- Activates normal detection of the input signal.
- Turns off math functions.

Functional Type:

instrument-state

Firmkey Access:

Traces

Preset State:

Executed

track gen

accesses the tracking-generator softkey functions.

Functional Type:

tracking generator

Firmkey Access:

State

Preset State:

Not affected by (IP).

TRACKNG ADJUST

(source tracking adjustment) The source tracking adjustment function allows you to adjust the tracking of the tracking generator output manually with the sweeping of the local oscillator, by centering the signal response in the IF resolution bandwidth filters. During tracking, the tracking generator is tuned to maximize the amplitude of the active trace.

Tracking adjustments are used for resolution bandwidths less than 2 kHz; they are typically necessary only for resolution bandwidths less than 300 Hz. Resolution bandwidths greater than 2 kHz do not require tracking adjustment. If the resolution bandwidth is changed, tracking adjustments should be repeated.

Follow this procedure when using the `TRACKING ADJUST` softkey.

1. Connect the RF OUTPUT of the tracking generator to the RF INPUT of the analyzer with a cable.
2. Turn on the source power with the `SRC PWR On Off` softkey. (The message `Tracking not required` appears on the display if `TRACKING ADJUST` is executed when the source is off.)
3. Select the measurement range with the `SPAN`, `CENTER`, `START`, and `STOP` softkeys. (High-insertion loss devices may require reference level adjustments.) Select a bandwidth less than 2 kHz with the `RES BW AutoMan` softkey. The message `Tracking not required` appears on the display if a bandwidth wider than 2 kHz is active when `TRACKING PEAK` is executed.
4. Press `TRACKING ADJUST`. Use the (▲) and (▼) step keys and knob to maximize the amplitude level of the signal on the analyzer display. Since the IF resolution bandwidths are somewhat flat at their tops, there can be more than one frequency that yields the same peak amplitude. (The message `Tracking not required` appears on the display if a bandwidth wider than 2 kHz is active when `TRACKING ADJUST` is executed.)

Use the numeric keypad to enter tracking adjustment values between ±500 Hz with 1 Hz resolution.

The (▲) and (▼) step keys change the tracking in 10 Hz steps between ±500 Hz.

The knob changes the tracking continuously between ±500 Hz with 1 Hz resolution.

Functional Type:

tracking generator

Firmkey Access:

`State`

Preset State:

Off

TRACKNG PEAK

(source tracking peak) maximizes the amplitude of the active trace at the point indicated by the active marker. If there is no active marker, marker #1 is activated and placed at the center frequency. The marker is used by TRACKING PEAK to find the highest amplitude. The marker can be placed at another point on the trace by using MKR NRM On Off. For example, the marker could be placed at a peak on the active trace and automatic tracking will move the marker to the center frequency.

When TRACKING PEAK is activated, the message Automatic Tracking appears while this operation is being performed. When finished, the message Automatic Tracking Completed appears. All markers are turned off after completion and all other instrument settings are restored.

Once a marker has been positioned, the system changes to zero span and reads the current resolution bandwidth value. As with TRACKING ADJUST, if the resolution bandwidth is greater than 2 kHz, tracking adjustments are not required and an error message of Tracking not required is displayed. (At wider bandwidths, since the adjustment range is small in comparison, tracking is not required.)

If the resolution bandwidth is less than 2 kHz, the sweep time and trace length are altered automatically to maximize the tracking adjustment speed. When the system has found the highest amplitude, the error message Automatic Tracking Completed is displayed. At this time, the original trace length, sweep time, and frequency span values are recalled. All markers are turned off at the completion of automatic tracking. Consider the following operating hints when using the TRACKNG PEAK softkey.

- If the RF OUTPUT of the tracking generator is not connected to the RF INPUT of the analyzer, the error message no peak found is displayed after approximately one minute.
- If (I-P) is pressed during automatic tracking, the current instrument settings will be lost unless they have been previously saved in a state register.
- Do not press any softkeys until the message Automatic Tracking Completed appears. If a softkey is pressed during tracking, that softkey function is immediately executed upon completion of automatic tracking.
- Although TRACKING PEAK is normally used with a through-connection, a device under test may be inserted in the signal path.
- Measuring high insertion-loss devices may require adjusting the reference level prior to tracking.

Functional Type:

tracking generator

Firmkey Access:

State

Preset State:

Off

TRIGGER DELAY

Control the trigger delay or pre-trigger for the currently selected ADC.

It is sometimes desired to have a delay between the occurance of a trigger (particularly an external trigger) and the taking of a sweep. This is particularly true when the desired sweep time is much less than the desired delay. Without trigger delay, trace resolution must be sacrificed to allow both the trigger and the desired data to be captured.

With TRIGDEL, one can select a delay between the trigger and the taking of a sweep. For the HP 70900B local oscillator source internal ADC, this delay is in addition to the normal internal trigger latency. For the HP 70700A digitizer ADC, this is a true trigger delay. The delay works for any trigger type.

If the trigger delay is not zero, an annunciator “T” (Tau) appears on the screen to indicate this. The annunciator is just to the right of the “ROFFSET” annunciator location.

For the HP 70900B local oscillator source, TRIGDEL specifies additional delay. Depending upon the measurement setup, the internal latency may be significant (but steady for that measurement setup).

For the HP 70700A digitizer, the error “ADC trig delay range” will be given if the specified trigger delay value is outside of the supported range. This error may occur even if TRIGDEL is not what was changed.

A range as specified for each ADC. For the HP 70900B local oscillator source internal ADC, the range is from 0 to 52428 uS with a resolution of 1 uS.

For the HP 70700A digitizer, the range is from -CT*N to CT*(1048574-N) with a precision of CT (CT = time per bucket, N = number of buckets in the first band). If the normal (Rosenfell) detector is selected, the maximum delay is half of the above maximum (the minimum is the same).

Functional Type:

bandwidth

Firmkey Access:

BWSwp

Preset State:

0

TRIGGER FREE

triggers the sweep with the spectrum analyzer, internal-triggering circuitry.

Functional Type:

sweep and trigger

Firmkey Access:

BWSwp

Preset State:

On

TYPE

moves the entry window in the limit-line table. The TYPE softkey determines whether the line segment is designated as a horizontal (flat) segment, a sloped segment, or a segment identified by the first frequency point.

Three types of line segments are available:

- FLAT draws a zero-slope line between the beginning points of two segments, producing limit-line values equal in amplitude for all frequencies between the two points.
- SLOPE draws a sloped line between the beginning points of two segments, producing limit-line values for all frequencies between the two points.
- POINT specifies a limit value for the beginning point only.

See the FREQ VALUE and AMPTD VALUE softkey descriptions.

Functional Type:

limit-line

Firmkey Access:

Misc

Preset State:

Off

Δ -> SP

(marker delta to span) sets the start and stop frequencies equal to the frequencies of the reference and active markers.

Functional Type:

marker

Firmkey Access:

Marker

Preset State:

Markers off.

units menu

provides an amplitude readout selection menu. The amplitude readout annotation for the reference level, marker, display line, and threshold can be changed to dBm, dBmV, dBμV, volts, or watts. For a lightwave signal analyzer, when a lightwave signal path and optical mode have been selected, the amplitude readout selection is limited to dBm and watts.

Functional Type:

amplitude

Firmkey Access:

Amptd

Preset State:

Not affected by (IP).

UPPER-> AMPCOR

(upper limit line -> amplitude corrections) stores an upper limit-line as amplitude correction values for a specific frequency range. Pressing the softkey replaces any corrections that were entered previously and activates the new amplitude corrections.

The amplitude corrections must first be entered into the upper limit-line table. To prepare the amplitude corrections for entry into the limit-line table, divide the frequency range into segments. Starting at the lowest frequency point, divide the frequency range into segments where the amplitude either remains flat or has a measurable slope.

For frequency segments that slope, record the frequency and amplitude of the beginning point and end point of the segment.

For frequency segments that are flat, record the frequency and amplitude of the end point of the segment only.

Enter these correction values into the upper limit-line table using the limit-line softkey functions.

After the correction values have been entered in the upper limit-line table, press the `UPPER-> AMPCOR` softkey to store and enable the amplitude-correction values.

Note Limit-line files can be used to store amplitude correction values for future use.

Functional Type:

amplitude-correction

Firmkey Access:

`Misc`

Preset State:

Off

UPPER/LOWER

specifies whether the parameters in the limit-line table are for the upper or lower limit-line.

Functional Type:

limit-line

UPPER/LOWER

Firmkey Access:

Misc

Preset State:

Upper

USR PWR On Off

(user power, on or off) allows the displayed optical power level for the trace and power meter to be adjusted, using a known optical input power level, specified by the user. A lightwave signal path must be selected and the power meter must be activated.

This function is typically used to correct for input connector losses or to calibrate the analyzer at a non-factory calibrated wavelength.

The function is preset to off. When the user power function is on, an asterisk (*) is displayed to the left of the power meter readout.

When a power-level offset is entered by the user, the responsivity of the lightwave section is scaled to correspond to the power level offset. The offset adjusts the optical average power meter reading and trace amplitude. The offset also adjusts optical trace and power meter information returned to a computer during remote-control operations.

An offset can be entered only if optical annotation for the power meter is selected. If electrical annotation is selected for the power bar, the user power function can be turned on or off, but no offset can be entered.

Note Although the user power function is used to correct or adjust the displayed optical power, it has no effect on the actual detected electrical power. Therefore, the display of the power meter and trace in electrical mode does not change when the user power function is activated.

To enter a power-level offset, enter the absolute power-level value directly, using the numeric keypad. Terminate the entry with the dBm softkey. The input value can also be modified using the ▲ and ▼ softkeys or the front panel knob.

Entering an power-level offset changes the average power meter reading to the value that is entered. The optical trace value is offset by the same change in power level.

For example, consider a measurement where the optical average power is −30 dBm and the optical trace peak amplitude is −36 dBm. The user-power softkey is used to enter a new power-level value of −20 dBm. The optical average power reading changes to −20 dBm and the optical trace peak amplitude changes to −26 dBm. Both readings have been offset by 10 dB. If the original system responsivity was 40 volt/watt, the responsivity is now 4 volt/watt. The new responsivity value scales inversely with the amount of offset correction that is applied.

To temporarily disable an offset, set the USR PWR On Off softkey to off. If the user power function is turned back on, the most recently entered user power offset value is enabled.

The following functions turn the user power function off and eliminate the responsivity scaling value:

- Performing an instrument preset

- Entering a new lambda value
- Entering a new manual responsivity value
- Recalling a new instrument state

User power offsets can be saved and recalled using the SAVE STATE and RECALL STATE softkeys.

See the SAVE STATE and RECALL STATE softkey descriptions.

Functional Type:

power-meter

Firmkey Access:

Amptd

Preset State:

Off

VBW AMP On Off

disable the amplitude-correction factors to the local oscillator. The corrections are disabled when the softkey is set to off.

These corrections improve the amplitude accuracy of displayed measurement results by compensating for irregularities in the IF-section, video bandwidth filters.

Functional Type:

calibration

Firmkey Access:

Amptd

Preset State:

On

VBW CPL Rx SA

Control the value of the receiver mode flag. This command controls whether the instrument behaves more like a receiver or a spectrum analyzer. This affects video bandwidth coupling, the ratio between the video bandwidth and the resolution bandwidth, and the ability to control the IF step gain.

Functional Type:

bandwidth

Firmkey Access:

`BWSwp`

Preset State:

SA

VBW/RBW RATIO

specifies the ratio between the video and resolution bandwidths that is maintained when their settings are coupled.

The video- and resolution bandwidth settings are coupled when the `VID BW AutoMan` softkey is set to automatic. When they are uncoupled, the video-bandwidth uncoupled indicator appears, as shown in Figure 4-8.

The ratio is determined as follows:

video bandwidth = resolution bandwidth × N

The preset value for N is 1. `Use VBW/RBW RATIO` to select another value for N between 10^{-100} and 10^{+100}.

See the `VID BW AutoMan` softkey description.

Functional Type:

bandwidth

Firmkey Access:

`BWSwp`

Preset State:

1

VERT OFFSET

Select the vertical offset of the three-dimensional trace display.

The THREEDV command allows you to change the vertical position of the traces, up or down, from the current position of a three-dimensional trace display. The function is activated with the THREED command, plus a value between 0 and ±200 positions. The vertical position of the traces is retained if you turn the function off with the THREED OFF command. It is not changed until you enter a new value.

Functional Type:

active-trace processing

Firmkey Access:

BWSwp

Preset State:

Off

VID AVG On Off

(video averaging) executes a digital-averaging routine that reduces the noise-floor level, but does not affect the sweep time, bandwidth, or any other analog characteristic of the analyzer. Video averaging activates the sample-detection mode.

VID AVG On Off operates on trace A, B, or C during clear-write mode. There is a trace priority set while video averaging. Trace A has the highest priority and trace C has the lowest. When video averaging a lower priority trace, blank the higher priority traces. Blanking the higher priority traces removes them from the video averaging process thereby reducing the measurement time.

The averaging function sets the averaging counter to 1, then begins averaging the trace as it sweeps. The active readout indicates the number of sweeps averaged; the default is 100 unless otherwise specified.

To average a specific number of sweeps, press VID AVG On Off and enter a value for the desired number of sweeps. Press ENTER to terminate the entry.

If the measurement range is changed before video-averaging is completed, the video-average counter is reset to 1.

Use VID AVG On Off to view low-level signals without increasing the sweep time. Increasing the number of sweeps averaged further reduces the displayed noise. Video averaging can lower the noise floor more than 1-Hz video-bandwidth filtering can, if a large number of sweeps are specified for averaging. Video averaging can also be used to monitor instrument state changes (for example, changing bandwidths, center frequencies, and so on) while maintaining a low noise floor.

`VID AVG On Off`

Functional Type:

active-trace processing

Firmkey Access:

`BWSwp`

Preset State:

Off, 100

VID BW AutoMan

(video bandwidth) specifies the width of the video-bandwidth filter and controls the coupling between the resolution bandwidth and video-bandwidth filter settings.

When a new video-bandwidth value is selected, the functions are uncoupled and the video bandwidth softkey setting switches to manual. When they are uncoupled, the video-bandwidth uncoupled indicator appears, as shown in Figure 4-8. Set the softkey to automatic to reestablish coupling.

See the `VBW/RBW RATIO` softkey description.

Functional Type:

bandwidth

Firmkey Access:

`BWSwp`

Preset State:

Auto

VIDEO

(video trigger) triggers the sweep with the detected, filtered, input signal (video). A sweep occurs when the detected signal satisfies the video triggering conditions, which are direction, hysteresis, and level. The sweep occurs when the detected signal increases or decreases (direction) a specified amount (hysteresis) when approaching a specified amplitude (trigger level).

For example, if video hysteresis is 5 dB and the trigger level is −90 dBm, the analyzer sweeps when the detected signal level changes from 95 dBm to −90 dBm.

See the HYS LEVEL and VIDEO LEVEL softkey descriptions.

Functional Type:

sweep and trigger

Firmkey Access:

BWSwp

Preset State:

Off

VIDEO LEVEL

specifies the trigger level for the video softkey function.

The video-trigger level is preset to 100 dBm and cannot exceed ±300 dBm. The smallest value allowed is 0.01 dBm.

See the HYS LEVEL and VIDEO softkey descriptions.

Functional Type:

sweep and trigger

Firmkey Access:

BWSwp

Preset State:

−100 dBm

VID LIN On Off

Control the video trigger display lines.

The VTDL command displays two horizontal video trigger display lines: trigger level and hysteresis offset. The trigger level line is a line that is placed at a level which corresponds to the current video trigger level. On HP 70004A color displays, the line is the same color as defined for MARKERS. This is determined by the display's "Adjust Color" menu. On monochrome displays, a dot-dash line is used.

The hysteresis offset line is an line that is offset from the trigger level line so as to indicate the size and polarity of video hysteresis necessary to cause a video trigger. On HP 70004A color displays, the line is the same color as defined for ADVISE (UNCAL) indicators. On monochrome displays, a sparse dot line is used.

The video trigger display lines are automatically activated when video triggering is selected and when either the video trigger level command (VTL) or the video trigger hysteresis command (VTH) is active. (The video trigger level display line cannot be turned off when either VTL or VTH is active.)

The display of these lines is automatically deactivated when another trigger mode is selected (as long as neither VTL nor VTH is active). The VTDL command can be used to override the automatic operation. The displays work in logarithmic, linear volts, and linear watts display modes.

Functional Type:

bandwidth

Firmkey Access:

`BWSwp`

Preset State:

Off

VIEW A/BLANK A

selects two functions. When set to view, stored trace data is displayed. When set to blank, stored trace data is blanked from the display, but remains in reserved memory. Trace B and Trace C have a corresponding view and blank softkey function.

This softkey is active after `STORE A` is pressed and disappears when `CLEAR WRT A` or `INSTR PRESET` is pressed.

Functional Type:

active-trace processing

Firmkey Access:

BWSwp

Preset State:

CLEAR WRT A

VOLT

allows the amplitude readout annotation for the reference level, marker, display line, and threshold to be changed to volts.

Functional Type:

amplitude

Firmkey Access:

Amptd

Preset State:

Off

WARNING On Off

Enables or disables warning messages from being displayed on the display.

Functional Type:

service-related

Firmkey Access:

Misc

Preset State:

On

WATT

allows the amplitude readout annotation for the reference level, marker, display line, and threshold to be changed to WATTs.

Functional Type:

amplitude

Firmkey Access:

`Amptd`

Preset State:

Off

WAVELEN

(wavelength) converts the displayed frequency to its related wavelength.

Functional Type:

marker

Firmkey Access:

`Marker`

Preset State:

Off

X

When in linear mode press `X`, after making a numeric entry, to specify the marker position in terms of a ratio.

Functional Type:

marker

Firmkey Access:

Marker

Preset State:

Off

ZERO

(zero offset compensation) zeroes offsets in the internal average power meter.

CAUTION Inaccurate signal trace measurements can occur if HSWP IN/OUT on the HP 70810B lightwave section is not connected to HSWP IN/OUT on the HP 70900B local oscillator source.

The signal trace measurement in progress is interrupted when the ZERO softkey is activated.

Pressing the ZERO softkey immediately executes a zeroing of the offsets in the internal average power meter. The offset is primarily due to photodiode dark current.

When the zeroing function is activated, an asterisk (*) appears momentarily to the right of the OPT or ELEC lightwave annotation.

See the AUTZERO On Off softkey description.

Functional Type:

power-meter

Firmkey Access:

Amptd

Preset State:

Off

ZOOM TO RES BW

(zoom to resolution bandwidth) reduces the span to 0 Hz, then adjusts the resolution bandwidth to a value of your choosing.

To use the zoom to resolution bandwidth function, first place a marker on signal peak of interest. Press the ZOOM TO RES BW softkey and enter the number of the desired resolution bandwidth, using the numeric keypad. Press the MHz, kHz, or Hz softkey to enter the units for resolution bandwidth value.

The span is reduced to 0 hertz when the units softkey is pressed.

Functional Type:

marker

Firmkey Access:

Marker

Preset State:

Off

5

Troubleshooting

Troubleshooting is divided into the following sections that provide system-level troubleshooting and repair information for HP 70000 Series modular spectrum analyzer systems and lightwave signal analyzers.

- "Troubleshooting Tools" identifies and explains the aids available for troubleshooting to the module or mainframe level.
- "Troubleshooting Procedures" has troubleshooting procedures for common modular analyzer systems and information on the use of the System Diagnostics software.
- "Catastrophic Failures" tells how to troubleshoot when none of the usual diagnostics are operating.
- "Repair Procedures" assists in finding the source of lower-level troubleshooting and repair information.

For descriptions of displayed error messages, refer to Chapter 6.

Troubleshooting Tools

There are two types of troubleshooting tools for HP 70000 Series modular spectrum analyzer systems: built-in tools and software programs. Below is a list of the troubleshooting aids in each of these categories.

Built-in Tools

- Status Indicators
- Error Message Reporting
- Display Tests
- Analyzer Test
- HP-MSIB Troubleshooting Utility

Software Programs

- System Diagnostics
- System Verification of Operation

Status Indicators

All elements and mainframes have status indicators. Status indicators that inform the operator of a problem are called error indicators. Indicators that tell the user which elements are communicating with a display element are called active indicators.

Element Status Indicators

Elements other than the displays have ERR (error) and ACT (active) indicator lights located on the front panel. Displays have indicator letters, E (error) and A (active), in the display-screen status block. See Figure 5-1.

The HP 70206A system graphics display or HP 70004A color displays have in addition to the letter E indicator, an I/O or HP-IB error indicator light on the front panel. These are explained in “Catastrophic Failures”.

Error Indicators. The ERR (error) light indicates that the element has an error condition. If the element is a slave, the error lights of both the slave and its master indicate the error condition. The error lights go out when the error condition no longer exists and it has been reported. Error conditions are reported either by an automatic error reporting routine, or when the operator presses the REPORT ERRORS softkey of the display menu.

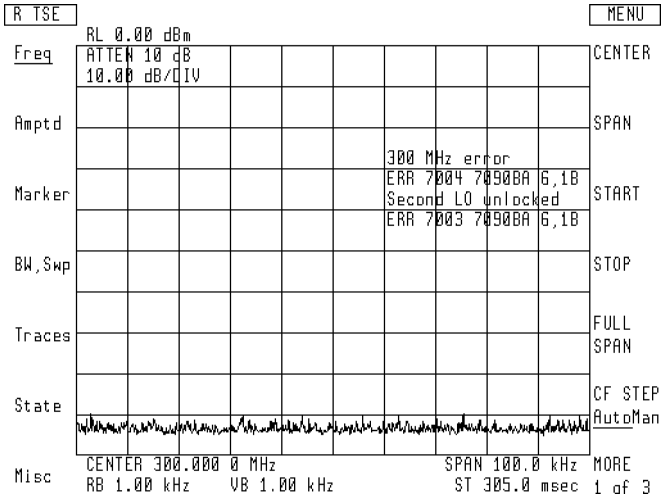

Figure 5-1. Error Reporting

The display letter E (error) indicates an error condition either in the display or in an element on the HP-MSIB that has reported errors to the display. An element can report errors to the display only if its HP-MSIB address is set to row 0. All elements in row 0 report their error status to the display. Masters in row 0 also report their slave error status to the display screen.

An error indicator flashing at a 1 Hz rate indicates that the element could not communicate on the HP-MSIB at power-up. A flashing error indicator also occurs with other errors that are only present under certain measurement conditions (for example, locking errors when the analyzer sweeps). In this case, the error indicator flashes at the sweep rate.

Active Indicators. The ACT (active) light of an element turns on when the element is being accessed through the display keyboard. If the element is in self-test mode, the ACT light remains on until the test is completed.

The display letter A (active) turns on when the display menus are accessed with the display key (for example, [DISPLAY] for the HP 70206A system graphics display or HP 70004A color display and [DSP] for the HP 70205A graphics display). When the assign-window, address-map, and next-instrument softkey functions for the display are operating, the active indicator turns on for the element that is selected. In all other display functions, the letter A is displayed.

Each element turns its active indicator on when the cursor of the display screen address map is at the HP-MSIB address of that element. The HP-MSIB address of each element may be identified by scrolling the cursor through the address map and observing the active indicators.

HP 70001A Mainframe Status Indicators

The HP 70001A mainframe has VOLT/TEMP, CURRENT, and I/O CHECK status indicators.

- The VOLT/TEMP light indicates that the line voltage or power supply temperature needs to be checked.
- The CURRENT light indicates that the loading conditions on the mainframe power supply may be incorrect.
- The I/O CHECK light indicates either problems with the HP-MSIB cables or that a mainframe (in a system with more than one mainframe or display instrument) is not turned on.

Additional information on these status indicators is given in “Catastrophic Failures” in this chapter.

Error Message Reporting

Error Message Block

The local oscillator (LO) displays error messages for the modular analyzer in the error message block of the LO display window. See Figure 5-1.

Each error message provides the error number and a description of the error as well as the model number and address of the element with the error condition. Up to five error code messages may be displayed simultaneously.

Error Report Screen

The display screen displays the errors being reported by any element at row address 0. See Figure 5-1. The error messages may be viewed by pressing the display key, then REPORT ERRORS. See Figure 5-2. The error report screen provides the error messages of elements on the HP-MSIB, and the MORE ERRORS softkey is displayed if there are additional error code messages on the succeeding page. See Figure 5-2 and Figure 5-3.

Displayed at the top of the error report screen are the model number, description, and HP-MSIB address of the element reporting errors. See Figure 5-3.

Note Error reporting is a function of HP-MSIB communication; therefore, if HP-MSIB is broken (indicated by a flashing letter E), errors cannot be reported. This is also true for the display. The display reports its own errors to itself over HP-MSIB.

A master element reports its errors and the errors of its slaves to the same error report screen. Error messages reported by a master show the model number and HP-MSIB address of the element that generated the error. Refer to the error messages in Figure 5-2.

When a slave element reports an error, the error indicator of its master remains on until the slave error condition is reported by the master, even if the slave error condition clears. When the REPORT ERRORS softkey is pressed, the master reports the error and, if the error has cleared, its error indicator goes off.

Exit the error report screen by pressing either the user or menu key. Press either the (USER) or (MENU) key on the HP 70206A system graphics display and HP 70004A color display, or press (USR) or (MNU) on the HP 70205A graphics display.

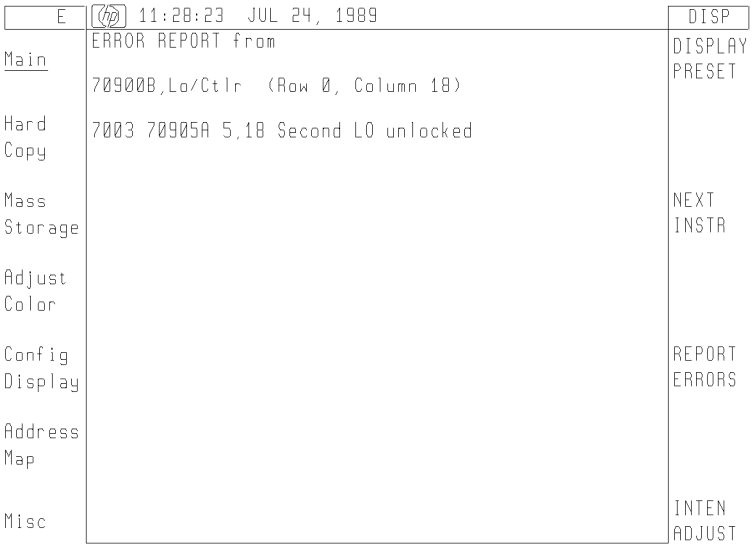

Figure 5-2. Error Report Screen

```
EA   11:31:02  JUL 24, 1989                                  DISP
Main   ERROR REPORT from                                     MORE
       70004A,DISPLAY  (Row 0, Column  4)                    ERRORS
Hard   2001 Illegal command          by HP-IB.
Copy
Mass
Storage
Adjust
Color
Config
Display
Address
Map
Misc
```

Figure 5-3. MORE ERRORS Softkey

Display-Disruptive Errors

Error conditions of the display instrument that interfere with normal screen displays are called display-disruptive errors. Display-disruptive error code messages (for example, A3 MEMORY READ) are displayed on the screen in large block letters.

Note Do not attempt to restart the system after a display-disruptive error without cycling power.

Display Tests

Display Tests are the diagnostic and adjustment routines of the display instruments (for example, HP 70206A system graphics display or HP 70004A color display). For an explanation of display test, refer to the installation and verification manual for the HP 70205A graphics display, HP 70206A system graphics display, or HP 70004A color display.

Analyzer Test

Analyzer Test is a self-test routine of HP 70000 Series modular spectrum analyzer system which have an HP 70900B local oscillator source configured as a master element. The display instruments are not tested by the analyzer test function.

If the analyzer passes this test, then the HP 70900B local oscillator source analog circuits, and the processor, memory, and HP-MSIB circuits of the analyzer, are functioning correctly.

Note Before running an Analyzer Test for a system containing an HP 70908A RF section (that is, an HP 71210C microwave spectrum analyzer), first press Instrument Preset I-P and allow one complete sweep. Then press (MENU), FREQ, SPAN, 100 MHz, CENTER FREQ, 300 MHz. This sets the span to 100 MHz and the center frequency to 300 MHz.

Access this test by pressing (MNU) on the HP 70205A graphics display or (MISC), MORE, SERVICE on the HP 70206A system graphics display or HP 70004A color display SERVICE, then

ANALYZER TEST. See Figure 5-4. Analyzer Test automatically runs at power-on, and it can be run by sending the command TEST from a remote controller. Analyzer Test is also run by the System Diagnostics Program.

Error messages from the Analyzer Test are displayed in the error message block of the display, if the display has been assigned to the local oscillator. When Analyzer Test detects an error, the system display and the LO error indicators light whether or not a local oscillator display window is assigned. Analyzer Test error messages may also be viewed with the Report Errors screen, whether or not there is a local oscillator display window or keyboard assignment, as long as the local oscillator is addressed at row 0.

Refer to "Troubleshooting Over the HP-IB" for information about running Analyzer Test from an external HP-IB computer.

Background Tests

The analyzer continually checks for certain error conditions. These checks are called background tests. Operating Errors 2000—2999 (listed in Chapter 5, "Error Messages") and locking or leveling errors, are examples of background test errors.

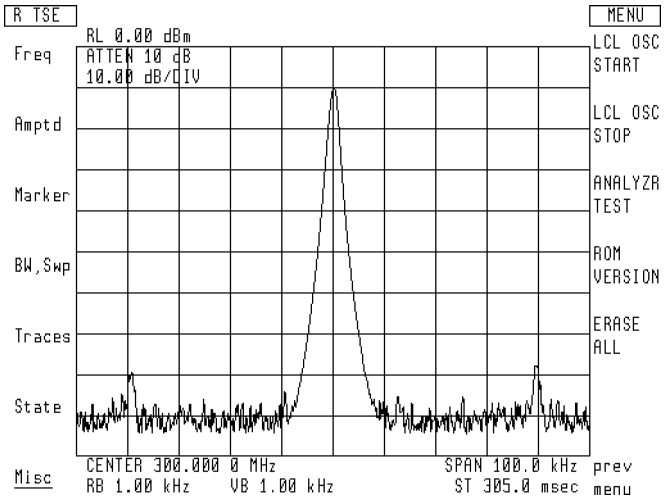

Figure 5-4. ANALYZR TEST Softkey

HP-MSIB Troubleshooting Utility

The HP-MSIB Troubleshooting Utility is built into the display element of the analyzer. This utility is not automatic, and it interferes with normal system operation. Refer to the display's Installation and Verification Manual for additional information.

Software Programs

System Diagnostics

System Diagnostics software consists of troubleshooting programs for HP 70000 Series modular spectrum analyzer systems. There are separate system diagnostics programs designed for use with specific systems.

When testing a lightwave signal analyzer and using System Diagnostics software versions dated C.01.00, and earlier, disconnect the cable between the RF OUTPUT of the lightwave section and the RF INPUT of the RF section. Connect the CALIBRATOR output directly to the RF INPUT of the RF section and perform the diagnostics test. Performing the test in this manner verifies the performance of the spectrum analyzer. Refer to the "Troubleshooting a Lightwave Signal Analyzer" section in this chapter for troubleshooting information about the lightwave section.

System Diagnostics tests modular spectrum analyzer analog circuits by using a calibrator signal while monitoring built-in service detectors.

System Diagnostics does not test displays. These may be tested by using the confidence test function of the display. To access the display tests, press (DISPLAY), `misc` and `display tests`.

The System Diagnostic program is loaded into the HP 70900B local oscillator source RAM at the factory for most preconfigured systems.

For more detailed information on the software, refer to "System Diagnostics" later in this section. Refer to the *HP 70000 Modular Spectrum Analyzer Installation and Verification Manual* for listings of which versions of System Diagnostics software, module hardware, and firmware models are compatible.

Operation Verification

Operation Verification is an external test program that runs on HP 9000 Series 200/300 controller and requires external test equipment.

The primary purpose of Operation Verification is to verify that the spectrum analyzer meets its major specifications; however, it also contains several testing modes that are useful for troubleshooting. For example, Operation Verification allows repeated testing of individual specifications. Repeated testing can be useful for troubleshooting intermittent problems.

Since Operation Verification tests the spectrum analyzer against specifications, the test may find failures that are not found by System Diagnostics.

Note When testing a lightwave signal analyzer using the Operation Verification tests, only the spectrum analyzer portion of the lightwave signal analyzer can be tested to specification. However, unlike the System Diagnostic test, the Operation Verification tests can be performed with the calibrator output connected to the RF INPUT of the lightwave section.

The *HP 70000 Modular Spectrum Analyzer Installation and Verification Manual* explains how to run this software program. A list of the Operation Verification tests is provided, as well as information about which modules may need adjustment or repair if a test fails.

Troubleshooting Procedures

The information in this section covers the following troubleshooting procedures for HP 70000 Series modular spectrum analyzer systems:

- "Troubleshooting a Lightwave Signal Analyzer"
- Categorizing Failures
- Troubleshooting from the Front Panel
- "Troubleshooting Over the HP-IB"

Read the preceding section, "Troubleshooting Tools," before beginning the following procedures.

Troubleshooting a Lightwave Signal Analyzer

The following troubleshooting procedure can be used to isolate a problem to either the HP 70810B lightwave section or the electrical spectrum analyzer that is incorporated into the lightwave signal analyzer.

- The HP 71400C lightwave signal analyzer combines an HP 70810B lightwave section with an HP 71210C microwave spectrum analyzer.
- The HP 71401C lightwave signal analyzer combines an HP 70810B lightwave section with an HP 71100C modular spectrum analyzer.

This procedure is intended for use with a lightwave signal analyzer that has a suspected performance problem, yet has no obvious system problem. Troubleshoot major lightwave signal analyzer system failures just as you would for a spectrum analyzer. Refer to the relevant section of this chapter for system-related problems (for example, a display, HP-MSIB, or catastrophic failure).

Note The HP 70810B lightwave section must be returned to the factory for all testing, servicing and repair. If a lightwave section is found to be faulty, contact your nearest Hewlett-Packard service office.

The troubleshooting procedure is divided into two parts. Both portions of the procedure use the same calibration routine to test the performance of the system.

The first part of the procedure checks the performance of the electrical spectrum analyzer while assuming good electrical switches in the HP 70810B lightwave section. If no failure is detected, the RF signal path through the lightwave signal analyzer system is functioning normally.

If the calibration routine fails, the second part of the procedure is performed. The RF signal path through the HP 70810B lightwave section is bypassed and the calibration routine is repeated. If the calibration routine now passes, the HP 70810B lightwave section is suspect. If the test fails, the electrical spectrum analyzer is suspect.

Troubleshooting Procedure—Part 1

1. Connect the HP 70900B local oscillator source CALIBRATOR output to the HP 70810B lightwave section RF INPUT.
2. Connect the HP 70810B lightwave section RF OUTPUT to the RF INPUT of the electrical spectrum analyzer.
3. To execute the calibration routine, press the following softkeys:

   Press `State`

   Press `select input`

   Press `IN 2 μW 70810B` (Input port number may vary depending on system configuration.)

   Press `Amptd`

   Press `CAL ALL`

   If the test passes, the components along the RF signal path through the lightwave signal analyzer system are functioning normally. If the test fails, continue at the next step.

Troubleshooting Procedure—Part 2

1. Disconnect the HP 70810B lightwave section RF OUTPUT from the RF INPUT of the electrical spectrum analyzer.
2. Connect the HP 70900B local oscillator source CALIBRATOR output directly to the RF INPUT of the electrical spectrum analyzer.
3. To execute the calibration routine, press the following softkeys:

   Press `State`

   Press `select input`

   Press `IN 3 70908A` (Input port number and RF section model number may vary depending on system configuration.)

   Press `Amptd`

   Press `CAL ALL`

   If the test passes, there is a problem with the HP 70810B lightwave section. The lightwave section must be returned to the factory for repair.

   If the test fails, there is a problem in the electrical spectrum analyzer. Perform any other relevant troubleshooting procedures from this chapter to further isolate the failure in the spectrum analyzer.

Note all the failure details and contact your nearest Hewlett-Packard service office. For information about your repair options, refer to "Repair Procedures". Refer also, to the *HP 70000 Modular Spectrum Analyzer Installation and Verification Manual* for instructions on returning an instrument or module for service.

Categorizing Failures

Most system problems may be isolated using either the "Troubleshooting from the Front Panel" or "Troubleshooting Over the HP-IB". However, this troubleshooting information is useful only if the troubleshooting routines (for example, System Diagnostics) are able to run.

Catastrophic failures prevent the spectrum analyzer from running troubleshooting routines. These failures usually result in a blank or distorted screen display, flashing error lights, or no displayed user or menu softkeys.

A display instrument (for example, HP 70004A color display) is required for diagnosing a catastrophic failure. Before beginning this troubleshooting procedure, make note of any error messages that are present. Use the following procedure to determine if a problem is caused by a catastrophic failure.

1. Cycle the power on the HP 70001A mainframe and HP 70004A color display then wait about 10 seconds.
   a. If the screen display shows a display-disruptive error, the display element is faulty. Refer to the appropriate Service Manual for further display instrument troubleshooting and repair information.
   b. If the user-menu softkeys appear on the screen display, the problem in not a catastrophic failure. If a problem remains after the power is cycled, use "Troubleshooting from the Front Panel" or "Troubleshooting Over the HP-IB" to perform additional troubleshooting.
   c. If the user-menu softkeys are not displayed, follow the steps below to assign the display window.
      i. Press (DSP) on the HP 70205A graphics display, (DISPLAY) on the HP 70206A system graphics display, or HP 70004A color display.
      ii. Press `SELECT INSTR`.

Note If more than one spectrum analyzer is on the HP-MSIB, the `NEXT INSTR` softkey may be used to select the desired instrument for testing. The softkey assigns the display window to the instrument with the lowest HP-MSIB column address. If the selected instrument does not need to be tested, press the `NEXT INSTR` or ▲ key to select the instrument with the next-highest HP-MSIB column address.

2. Press (USR) on the HP 70205A graphics display, (USER) on the HP 70206A system graphics display or HP 70004A color display, to access the user-menu softkeys.
   - If the user-menu softkeys are displayed on the screen, the problem in not a catastrophic failure. If a problem is still present, use "Troubleshooting from the Front Panel" or "Troubleshooting over HP-IB" in this section to perform additional troubleshooting.
   - If the user-menu softkeys fail to appear, the analyzer has a catastrophic failure. For further troubleshooting information, refer to "Catastrophic Failures".

Troubleshooting from the Front Panel

The following procedure uses most of the diagnostics of the spectrum analyzer. Before attempting to diagnose a module failure, use this procedure to collect all possible clues.

Note Before testing a lightwave signal analyzer using this procedure, refer to "Troubleshooting a Lightwave Signal Analyzer" in this chapter.

---

1. Verify the function of the system display by pressing (DSP) on the HP 70205A graphics display, (DISPLAY) on the HP 70206A system graphics display or HP 70004A color display.
2. Select `display tests`.
3. Press `CONFID TEST`.
4. It is indicated on the screen display title line whether the confidence test passed or failed.
   a. If the confidence test failed, press `REPORT ERRORS`. Record any errors, then refer to the appropriate service manual to repair the faulty display instrument.
   b. If the confidence test passed, continue with this procedure.

Note If an HP 70907A/B external mixer interface module is the only RF section in the system being tested, skip the next step.

---

5. Connect the local oscillator CALIBRATOR signal to the RF INPUT of the modular spectrum analyzer.

   If the system is a lightwave signal analyzer, disconnect the cable between the RF OUTPUT of the lightwave section and the RF INPUT of the RF section. Connect the CALIBRATOR signal directly to the RF INPUT of the RF section that is installed in the system.
6. Press (USR) on the HP 70205A graphics display, (USER) on the HP 70206A system graphics display or HP 70004A color display to access the user softkeys.
7. Press the `SYSTEM DIAG` softkey. Allow approximately 5 to 10 minutes for the program to run.

Note If there is no `SYSTEM DIAG` softkey label, or if the System Diagnostics program does not run when the softkey is pressed, refer to the "System Diagnostics" information in this section.

---

8. If System Diagnostics cannot be run from either the front panel or from an HP 9000 Series 200/300 controller, perform the following steps to initiate a self-test of the system.
   a. If the system contains an HP 70908A RF section, press Instrument Preset (I-P) and allow one complete sweep. Then press (MENU), `FREQ`, `SPAN`, 100 `MHz` `CENTER FREQ`, 300 `MHz`. This sets the span to 100 MHz and the center frequency to 300 MHz.
   b. Press either the (MNU) key on an HP 70205A graphics display, or the (MENU) key present on an HP 70206A system graphics display and HP 70004A color display.
   c. Press `Misc`
   d. Press `MORE`
   e. Press `service`

f. Press `ANALYZR TEST`.

9. Record any error messages, including the model numbers and HP-MSIB addresses displayed in the error message block of the screen display.

   Use the error messages, including model numbers and addresses, to identify the faulty element. Refer to Chapter 5, "Error Messages," for an explanation of the displayed error messages.

Note When testing a lightwave signal analyzer using the Operation Verification program, only the performance of the spectrum analyzer portion of the lightwave signal analyzer system is verified. For further troubleshooting information about the lightwave section, refer to "Troubleshooting a Lightwave Signal Analyzer".

If no error messages are generated by this procedure and an instrument failure is still suspected, run the Operation Verification program to verify that the analyzer meets its major specifications.

Details for running the Operation Verification program are provided in *HP 70000 Modular Spectrum Analyzer Installation and Verification Manual.* The following Operation Verification function softkeys are particularly useful troubleshooting tools.

- `Single Test` is helpful for testing individual specifications, allowing only the suspect function to be tested.
- `Repeat Test` is used to test an individual specification repeatedly, allowing an intermittent failure in one suspect function to be tested.
- `Multiple Tests` is helpful for testing multiple specifications, allowing more than one suspect function to be tested.
- `Repeat Mult.` is used to test multiple specifications repeatedly, allowing an intermittent failure in more than one suspect function to be tested.

For more information about these function softkeys, refer to the *HP 70000 Modular Spectrum Analyzer Installation and Verification Manual.*

Troubleshooting Over the HP-IB

Troubleshooting over HP-IB is recommended only if there is no display element (for example, an HP 70205A graphics display) available.

The following analyzer remote commands may be used to test the analyzer from an external HP-IB computer. The remote command, "TEST," performs the same tests that are performed when the `ANALYZR TEST` softkey is used.

TEST	begins the analyzer test routine for the HP 70900B local oscillator source.
ERR	(error query) returns the error number for each unreported analyzer error. These errors include those reported by both the analyzer test and background tests (for example, Operating Errors 2000—2999).
XERR	(extended error query) returns the same information as the ERR programming command, except that it also returns an ASCII description of each error and the HP-MSIB address of the module that generated the error.

The commands listed above, along with their syntax, are described in *HP 70000 Modular Spectrum Analyzer Programming Manual.*

System Diagnostics

This section provides information on running the system diagnostics program of HP 70000 Series modular spectrum analyzer systems. Information in this section applies only to running System Diagnostics with HP 70900B local oscillator source firmware version 861015 or later.

System Diagnostics programs may be modified with revisions of the firmware in the HP 70900B local oscillator source. System Diagnostics software for HP 70000 Series modular spectrum analyzer systems automatically runs the Analyzer Test routine. A functional test of analyzer analog circuits is also run by this software.

System Diagnostics may be run with an HP 9000 Series 200/300 controller by using the REM_DIAG utility program. This program is shipped with the instrument on the System Diagnostics disk. The System Diagnostics information in this section explains how to use REM_DIAG.

- "Running Diagnostics" explains how to run System Diagnostics from the system front panel or remotely from an HP 9000 Series 200/300 controller.
- "System Diagnostics Requirements" lists requirements for running System Diagnostics, explains how to avoid destroying System Diagnostics, and tells how to avoid other problems.
- "Running the System Diagnostics Utilities" describes the utilities available on the System Diagnostics disk.
- "Recovering from Problems" provides information about what to do when System Diagnostics does not run.

Refer to the *HP 70000 Modular Spectrum Analyzer Installation and Verification Manual* for the latest System Diagnostics software version and part number. The System Diagnostic software is backwards compatible.

Running Diagnostics

System Diagnostics may be run from the front panel of a modular analyzer by pressing `SYSTEM DIAG`, or it may be run remotely from a computer by using the REM_DIAG utility.

Note If an HP 9000 Series 200/300 controller is not to be used, make a backup copy of System Diagnostics for the computer model to be used, before running the program. An explanation of how to make backup copies is in "System Diagnostics Requirements" on the following pages. If an HP 9000 Series 200 controller is used, the System Diagnostics disk is the backup.

Running Diagnostics from the Front Panel

When the System Diagnostics program is loaded into RAM, the `SYSTEM DIAG` softkey appears on the user-softkey menu. Figure 5-5 shows the location of the `SYSTEM DIAG` softkey on the user-softkey menu. Firmware date codes prior to 901008 display the `SYSTEM DIAG` softkey as the last softkey in the left-hand row of user softkeys. Press the `SYSTEM DIAG` softkey to initiate the System Diagnostics program. The program searches through the configuration to determine which tests are to be run. Allow approximately 10 minutes for the program to run. The first-pass testing is performed in the uncorrected mode. If no problems are detected, the modular spectrum analyzer is calibrated and the test is run again in the corrected mode. During testing, the module and condition being tested are displayed in the general annotation block. If any errors are detected, the error messages are displayed just below the general annotation block. For additional information on the error messages, refer to "Error Messages" in this

section. During testing, the (USER) and (MENU) keys are unavailable. After program completion, these menu keys return to the screen display.

If this program is not currently loaded into RAM and System Diagnostics is to be run from the front panel and you need information on how to load and run DOWN_DIAG, refer to “Running the System Diagnostics Utilities”.

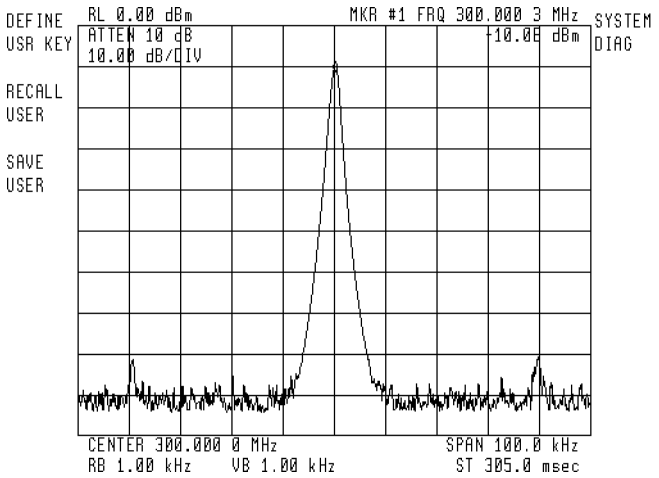

Figure 5-5. System Diagnostics Softkey Menu

Running Diagnostics Remotely

Use the following procedure to run the REM_DIAG utility from an HP 9000 Series 200/300 controller.

1. Load HP BASIC 2.0 with extensions 2.1, or equivalent.
2. Use an HP-IB cable to connect the HP-IB ports of the computer to the modular spectrum analyzer. This cable must connect directly to the HP 70004A color display or HP 70001A mainframe that contains the master (HP 70900B local oscillator source LO).
3. Insert the System Diagnostics Software disk into the default drive of the computer.
4. Type `LOAD "REM_DIAG"`.
5. Press `EXECUTE`.
6. Press `RUN`, then follow the instructions on the computer screen display.

System Diagnostics Requirements: Version C.03.00

Requirements for running System Diagnostics are explained in this section. Also provided is information on how to avoid problems.

System Diagnostics can be destroyed if the program is in the local oscillator RAM and then the ERASE command is executed or the `ERASE ALL` softkey is pressed. It can also be destroyed by the user if each user-defined function (FUNCDEF) and variable definition (VARDEF) has been individually unprotected and the DISPOSE ALL command executed.

System Diagnostics will take up approximately 12 K of local oscillator RAM to run. To determine how much user RAM is available after the system diagnostics program is loaded, display a catalog of internal memory by pressing (MENU), `MISC`, `MORE`, and `catalog & MSI`.

HP-MSIB Addressing Order

In addition to meeting the normal addressing requirements, the HP-MSIB addresses of the spectrum analyzer must meet these additional requirements:

- The local oscillator must have a row address of 0.
- If the HP 70900B local oscillator source is a sub-master, not addressed in row zero, its master must be removed and the HP 70900B local oscillator source readdressed to row zero before system diagnostics will run.
- The local oscillator to be tested must have a lower column address than other local oscillators at row address 0.

Error messages are generated if the above requirements are not met.

Check the addresses of all elements on the HP-MSIB by using the `address map` softkey accessed by pressing the (DISPLAY) softkey.

Calibrator Signal

To run System Diagnostics for an HP 71100C modular spectrum analyzer/HP 71200C modular spectrum analyzer/HP 71210C microwave spectrum analyzer, the CALIBRATOR output of the HP 70900B local oscillator source must be connected to the RF INPUT of the RF Section. This connection is not necessary for any system with an HP 70907A/B external mixer interface module used as the RF Section to be tested. The HP 70907A/B external mixer interface module provides its own internal calibrator. To run System Diagnostics for the HP 71400C lightwave signal analyzer and HP 71401C lightwave signal analyzer, disconnect the cable between the RF OUTPUT of the lightwave section and the RF INPUT of the RF section. Connect the CALIBRATOR signal directly to the RF INPUT of the RF section.

The System Diagnostics program cannot be run with the lightwave section in the signal path. Rerouting the signal path allows the performance of the spectrum analyzer portion of the lightwave signal analyzer to be tested separately. The HP 71400C lightwave signal analyzer combines an HP 70810B lightwave section with an HP 71210C microwave spectrum analyzer modular spectrum analyzer. The HP 71401C lightwave signal analyzer combines an HP 70810B lightwave section with an HP 71100C modular spectrum analyzer.

Making Backup Copies of System Diagnostics

If there is access to an HP 9000 Series 200/300 controller for running System Diagnostics, the System Diagnostics disk shipped with this manual can serve as the backup. For instructions, refer to “Running the System Diagnostics Utilities”.

If access to an HP 9000 Series 200/300 controller is not possible, use the USTATE command to make a backup copy for your computer. Refer to *HP 70000 Modular Spectrum Analyzer*

Programming Manual for more information on the USTATE command. The USTATE command outputs the entire contents of the HP 70900B local oscillator source RAM (including System Diagnostics) to the HP-IB.

Saving the Contents of RAM

The following program lines demonstrate a suggested procedure to read or write the memory of the HP 70900A/B local oscillator source.

Note The HP-IB address of the local oscillator is usually set to 718 before shipping. If your local oscillator has a different HP-IB address, use that address in line 270 of the example READ_LO and line 70 of the example WRITE_LO rather than 718.

This program reads the HP 70900 USER memory area and writes this data to a user-specified storage file. It is intended to be used to store previously loaded DLPs prior to allocating the USER memory for another purpose. Its companion program, WRITE_LO, is used to restore the data read by this program.

This program will read data blocks up to 32 Kbytes in length until all USER memory has been read. This method of programming is used to avoid a BASIC run-time error which occurs when a string is made greater than 32 Kbytes long.

The operator should edit lines 270 and 280 of the READ_LO and lines 60 and 70 of the WRITE_LO if they do not accurately reflect his configuration.

Note It is not possible to restore USER memory from one version of HP 70900A/B local oscillator source firmware into another version of firmware using this program.

CAUTION Before writing to memory, check to ensure that there is nothing of value stored in RAM. Writing to RAM will write over anything previously stored.

Read/Write LO Memory

```
10! READ_LO
20 !
30 ! This program reads the HP 70900 USER memory area and
40 ! writes this data to a user-specified storage file.
50 ! It is intended to be used to store previously loaded
60 ! DLPs prior to allocating the USER memory for another
70 ! purpose.  Its companion program, WRITE_LO, is used
80 ! to restore the data read by this program.
90 !
100 ! This program will read data blocks up to 32Kbytes in
110 ! length until all USER memory has been read.  This is
120 ! to prevent a BASIC run-time error which occurs when
130 ! a string is made >32Kbytes long.
140 !
150 ! The operator should edit lines 270 and 280 if they do
160 ! not accurately reflect his configuration.
170 !
180 ! NOTE: It is not possible to restore USER memory from
190 ! one version of HP 70900 firmware into another
200 ! version of firmware using this program.
210 !
220 !
230 INTEGER Separator,Data_length ! DECLARE INTEGER VARIABLES
240 DIM Filename$[160] ! DIMENSION STRING FOR FILE
250 !
260 Separator=0
270 Hpib_addr=718 ! THE HP 70900 HP-IB ADDRESS
280 Filename$="U_STATE" ! THE NAME AND LOCATION OF THE
290 ! STORAGE FILE
300 !
310 ASSIGN @Lo TO Hpib_addr ! OPEN I/O PATH TO 70900
320 !
330 ON ERROR GOSUB Kill_file ! WE NEED TO RE-CREATE IT EACH
340 CREATE BDAT Filename$,256 ! TIME WE USE IT
350 OFF ERROR
360 ASSIGN @Disc TO Filename$ ! OPEN I/O PATH TO STORAGE FILE
370 !
380 OUTPUT @Lo;"USTATE?;" ! SEND USTATE QUERY TO 70900
390 !
400 REPEAT ! UNTIL SEPARATOR NOT VALID
410 ENTER @Lo USING "#,2X,W";Data_length! READ DATA LENGTH OF STATE BLOCK
420 ALLOCATE U_state$[Data_length] ! DIMENSION TO CORRECT LENGTH
430 Format$="%,"&VAL$(Data_length)&"A" ! SPECIFY READ FORMAT
440 ENTER @Lo USING Format$;U_state$ ! READ THE STATE STRING
450 OUTPUT @Disc;Data_length,U_state$ ! WRITE LENGTH & STRING TO FILE
460 DEALLOCATE U_state$ ! KILL IT FOR NOW
470  ENTER @Lo USING "%,B";Separator ! CHECK FOR MORE DATA
480 UNTIL Separator<>44 ! CHR$(44) IS COMMA, THE VALID
490 ! SEPARATOR
500 ASSIGN @Disc TO * ! CLOSE STORAGE FILE
510 STOP
520 !
530 Kill_file: ! THIS ROUTINE WILL DESTROY THE PREVIOUS U_STATE FILE
```

```
540 PURGE Filename$
550 RETURN
560 !
570 !
580 END
```

Note It is not possible to restore USER memory from one version of HP 70900 firmware into another version of firmware using this program.

```
10! WRITE_LO
20 !
30 INTEGER Data_length
40 DIM Filename$[160]
50 !
60 !
70 Hpib_addr=718 ! HP 70900 HP-IB ADDRESS
80 Filename$="U_STATE" ! THIS SHOULD MATCH FILE
90 !
100 ASSIGN @Lo TO Hpib_addr ! DEFINE I/O PATH NAME
110 ASSIGN @Disc TO Filename$ ! DEFINE STORAGE PATH NAME
120 !
130 ON END @Disc GOTO Done ! TRAP END OF DATA READ
140 LOOP ! UNTIL END OF DATA
150 ENTER @Disc;Data_length ! READ DATA LENGTH OF STRING
160 ALLOCATE U_state$[Data_length] ! DIMENSION STATE STRING
170 ENTER @Disc;U_state$ ! READ STRING FROM FILE
180 OUTPUT @Lo USING "K";U_state$ ! WRITE STRING TO 70900
190 DEALLOCATE U_state$ ! KILL IT FOR NOW
200 END LOOP
210 Done: !
220 OUTPUT @Lo USING "B";10,END ! SEND DATA TERMINATOR (EOI)
230 ASSIGN @Disc TO * ! CLOSE STORAGE FILE
240 END
```

System Diagnostics Utilities

A copy of the System Diagnostics utility program is shipped with this manual on 3-1/2 inch disks. These utility programs run on HP 9000 Series 200/300 controller that have HP BASIC 2.0 with extensions 2.1, or equivalent, loaded.

Each disk contains the following System Diagnostics utilities.

SAVE_STATE	saves both the instrument state and the contents of the spectrum analyzer RAM on disk.
RSTR_STATE	(Restore State) restores the RAM contents and the instrument state to the spectrum analyzer.
DOWN_DIAG	(Download Diagnostics) downloads diagnostics into the local oscillator RAM and displays the `SYSTEM DIAG` softkey in the user-softkey menu. Pressing this softkey initiates the program. The original instrument state is not restored after execution of the program.
REM_DIAG	(Remote Diagnostics) saves both the instrument state and RAM contents on disk, runs System Diagnostics, then reports any errors to the computer screen. Finally, it restores the instrument state and RAM contents.

Running the System Diagnostics Utilities

Use the following procedure to run any of the utilities on an HP 9000 Series 200/300 controller.

1. Load BASIC 2.0 with extensions 2.1, or equivalent.
2. Use an HP-IB cable to connect the HP-IB of the computer to the spectrum analyzer. This cable must connect directly to the HP 70004A color display or HP 70001A mainframe that contains the master (HP 70900B local oscillator source).
3. Insert the disk labeled System Diagnostics Software (Disk 1 of 1) into the default drive of the computer.
4. Type the command `LOAD`. Follow with a space and the name of the utility in quotes (for example, `LOAD "SAVE_STATE"`).
5. Press `EXECUTE`.

Note Only the REM_DIAG utility allows the System Diagnostics program to be run repeatedly. To run the test again, press `RUN` and follow the instructions on the computer screen.

6. Press `RUN` and follow the instructions on the computer screen. The softkeys that are normally displayed after pressing (USER) or (MENU) are not visible while the program is running. Some keys return when the program is finished others require “LOCAL” commands.

Recovering from Problems while Running System Diagnostics

This section provides information to help resolve some common problems that can prevent System Diagnostics from running.

Memory Overflow Message

A `MEMORY OVERFLOW` error message is generated when there is no more RAM available. Reducing the number of instrument states to zero and removing user-defined functions and variables should free enough memory to allow System Diagnostics to run.

Other Error Messages

Some System Diagnostics error messages (for example, `NO RF SECTION?`) are generated if the requirements listed in the System Diagnostics Requirements section are not met.

Refer to Chapter 5, "Error Messages," for additional information on error messages.

No System Diagnostics in RAM

System Diagnostics may be reloaded into RAM of the spectrum analyzer by using an HP 9000 Series 200 controller and DOWN_DIAG on the System Diagnostics disk.

Refer to "Running the System Diagnostics Utilities" in this chapter for instructions.

Catastrophic Failures

Catastrophic failures block the ability of the spectrum analyzer to run troubleshooting routines (for example, System Diagnostics). These failures usually result in a blank or distorted display on the screen, flashing error LEDs, and/or no User or Menu screen softkeys.

Troubleshooting information for catastrophic failures is included in the following:

- "Symptoms" is a list of some catastrophic failure symptoms with descriptions of the probable causes.
- "HP-MSIB Troubleshooting" describes two troubleshooting methods for HP-MSIB problems.

Before troubleshooting a catastrophic failure, verify that the correct line power is applied to the mainframe and stand-alone display instrument, if one is used. The HP 70001A mainframe or HP 70004A color display power-on indicator should light when the LINE switch is turned on. If the power-on indicator does not light, refer to the *HP 70001A Service Guide* or *HP 70004A Service Guide* for troubleshooting information.

Symptoms

The two kinds of symptoms that help isolate a catastrophic failure are:

- Error Indicators
- Abnormal Screen Display

Error Indicators

All elements and the mainframe have error indicators to assist with troubleshooting.

E (Error) Letter and ERR (Error) Light

The display instruments error indicator is a letter `E` displayed in the lower right-hand corner status block of the screen display. See Figure 5-1. Elements, except displays, have an ERR (Error) indicator LED located on the front panel. If the letter `E` or the ERR LED on an element flashes at a 1 Hz rate, either the element cannot communicate over the HP-MSIB and is probably faulty, or the HP-MSIB cables are faulty or not connected correctly.

If more than one module error indicator flashes at a 1 Hz rate, either the mainframe HP-MSIB is faulty or a faulty module is disrupting the entire HP-MSIB communication.

Note It is possible that a module may disrupt all HP-MSIB communication without its own error indicator flashing.

HP-MSIB Troubleshooting information on the following pages explains how to isolate some HP-MSIB problems.

I/O or HP-MSIB Indicator is On. The HP 70206A system graphics display or HP 70004A color displays have, in addition to a letter `E` indicator, an I/O or HP-MSIB error indicator. The indicator should be off when both HP-MSIB cables are either connected to or disconnected from the display. It should be on when one HP-MSIB cable is disconnected from the display. It also comes on when any mainframe or display on HP-MSIB is not powered on. If the I/O or HP-MSIB indicator is on, no element can operate until it is cleared and all instruments on the HP-MSIB are powered on. The following procedure may be used to try to isolate reasons why the indicator is on.

1. Verify that the power to all mainframes and display instruments on the HP-MSIB is on.
2. Check that all HP-MSIB cables are properly and securely connected.

3. Disconnect the HP-MSIB cables from the HP 70206A system graphics display or HP 70004A color display. Is the indicator still on?

If yes: If an HP 70206A system graphics display display is in use, it is faulty. Refer to the *HP 70206A Service Guide* for further troubleshooting and repair information.

If an HP 70004A color display is used, the problem could be either the modules installed in the display or the display itself. Remove all of the modules.

If the I/O indicator is still on, the problem is in the HP 70004A color display. Refer to the *HP 70004A Service Guide* for further troubleshooting and repair information.

If the indicator is off, the problem is caused by one of the modules. Put them back one at a time. When the light comes on, the last module replaced is faulty.

If no: The problem is either the cables or the instrument that was connected to the display with the cables.

1. First test both cables at the same time. With one end of each cable attached to the "IN" and "OUT" HP-MSIB mainframe connectors, connect the opposite ends of the two cables together.
2. If the I/O mainframe light comes on, one of the two cables is faulty.
3. Remove one of the cables. Connect the remaining cable so that it is connected to the "IN" and "OUT" HP-MSIB mainframe connectors.
4. If the I/O mainframe light comes on, the cable is faulty. If the I/O light does not come on, test the other cable.
5. If the light does not come on for either cable, then the element connected with these cables is faulty. Refer to the service manual for that element for troubleshooting information.

An alternate troubleshooting approach is to reconnect the HP-MSIB cables and use the HP-MSIB Troubleshooting Utility to isolate the problem further.

Note Elements responding to the HP-MSIB Troubleshooting Utility with `COMMUNICATION COMPLETE` indicate that the cables are not faulty.

The HP 70001A mainframe has three error indicator LEDs: VOLT/TEMP, CURRENT, and I/O CHECK. Descriptions of the indicators are listed below.

Volt/Temp Error Indicator LED.

- The input voltage may be too low. Verify that the LINE VOLTAGE SELECTOR on the bottom of the mainframe is set to match the line voltage supplied.
- The internal temperature on the mainframe power-supply board assembly may be exceeding normal operating temperatures. Wait for the temperature to decrease to the normal operating range. When the mainframe attempts to restart itself, verify that the cooling fans are operating by checking the airflow into both of the rear panel fan-intake openings of the mainframe.
- If the previous steps are not successful, the HP 70001A mainframe is probably faulty. Refer to the *HP 70001A Service Guide* for further troubleshooting and repair information.

Current Error Indicator LED. The CURRENT error indicator lights when the mainframe power supply senses overloading.

1. Remove one module from the mainframe.
2. Cycle the power. Is the CURRENT indicator lit?

   If yes: The module is not faulty. Repeat Steps 1 and 2 until a faulty module is identified.

   If no: The module is probably faulty. To verify, replace the module in the mainframe and check if the CURRENT indicator lights again. For repair alternatives, refer to "Repair Procedures".

3. If the CURRENT indicator is still lit when all of the modules have been removed from the mainframe, the mainframe is probably faulty. Refer to the *HP 70001A Service Guide* for further troubleshooting information.

I/O Check Error Indicator LED. The I/O CHECK LED should be off when both HP-MSIB cables are either connected to or disconnected from the HP 70001A mainframe. The LED should be on if one of the HP-MSIB cables is disconnected from the mainframe. It also comes on when any mainframe or display on HP-MSIB is not powered on. If the indicator is on, no element can power up until it is cleared. The following procedure may be used to isolate reasons for the I/O CHECK LED to be on.

1. Verify that the power to all mainframes and stand-alone display instruments on the HP-MSIB is on.
2. Check that all HP-MSIB cables are properly and securely connected.
3. Disconnect the HP-MSIB cables from the mainframe. Is the I/O CHECK LED still lit?

If yes: The HP 70001A mainframe is probably faulty. Refer to the *HP 70001A Service Guide* for further troubleshooting information.

If no: The problem is either the cables or the instrument that was connected to the display with the cables.

1. First test both cables at the same time. With one end of each cable attached to the "IN" and "OUT" HP-MSIB mainframe connectors, connect the opposite ends of the two cables together.
2. If the I/O mainframe light comes on, one of the two cables is faulty.
3. Remove one of the cables. Connect the remaining cable so that it is connected to the "IN" and "OUT" HP-MSIB mainframe connectors.
4. If the I/O mainframe light comes on, the cable is faulty. If the I/O light does not come on, test the other cable.
5. If the light does not come on for either cable, then the element connected with these cables is faulty. Refer to the service manual for that element for troubleshooting information.

An alternate troubleshooting approach is to reconnect the HP-MSIB cables and use the HP-MSIB Troubleshooting Utility to isolate the problem further.

Note Any elements responding to the HP-MSIB Troubleshooting Utility with `COMMUNICATION COMPLETE` indicate that the cables are not faulty.

Abnormal Screen Display

An abnormal screen display may indicate which element or mainframe is faulty. Cycle the power of the mainframe and the stand-alone display instrument, if one is used, and observe the screen display. Select the symptom below that is closest to what is observed.

- The screen display is blank or distorted.
  a. The screen is blank while system reset is occurring. Check the I/O light before assuming the display is faulty.
  b. If a display module (for example, HP 70205A graphics display) is being tested, the screen display being blank or distorted indicates that the display module may be faulty. Refer to the appropriate technical reference or service manual for further troubleshooting and repair information.
  c. If a stand-alone display (for example, HP 70206A system graphics display) is being tested, disconnect the HP-MSIB cables and cycle the power of the stand-alone display. If the screen is still blank or distorted, the stand-alone display may be faulty. Refer to the appropriate service manual for troubleshooting and repair information.
- Except for a message written in large block letters, the screen display is blank. This is a display-disruptive message which indicates that the display instrument is probably faulty. Refer to the appropriate service manual for repair information.
- The screen display shows the display instrument model number, firmware version, HP-MSIB address, and HP-IB address. This symptom means that either the display window is not assigned to the local oscillator, or the display instrument is unable to communicate with the local oscillator. (Check for the flashing letter E which indicates an HP-MSIB problem.)
  a. Assign a display window to the local oscillator by pressing (DSP) on the HP 70205A graphics display or (DISPLAY) on the HP 70206A system graphics display or HP 70004A color display, then NEXT INSTR. (This assigns the display to the master with the lowest column address.) Press either the NEXT INSTR or ▲ key to assign the system display to the master with the next highest column address.
  b. if the display window cannot be assigned to the local oscillator in the manner described above, then a module with a faulty HP-MSIB interface is hanging up the spectrum analyzer, or the HP-MSIB or local oscillator is faulty. To troubleshoot the problem further, refer to "HP-MSIB Troubleshooting".

HP-MSIB Troubleshooting

There are two methods of troubleshooting HP-MSIB problems.

- The "HP-MSIB Troubleshooting Utility," a firmware routine of the display element, verifies element communication over HP-MSIB. By determining which elements are communicating, the HP-MSIB problem may be isolated. This utility is useful for troubleshooting an HP-MSIB problem that caused either flashing error indicators or an abnormal screen display. This utility allows isolation of most problems without removing modules from the mainframe. Mainframe or display element problems cannot be isolated by this utility.

Note The HP-MSIB Troubleshooting Utility inhibits normal operation of the HP 70000 Measurement System. Use of the utility may cause the system to require cycling of power before operation may continue.

This utility is described in detail in the Installation and Verification Manual for the displays.

- The “Module Removal Method” may only be used to troubleshoot the HP-MSIB when error indicators are flashing. Modules with flashing error indicators are individually removed from the HP 70001A mainframe or HP 70004A color display until the faulty module or HP 70001A mainframe/HP 70004A color display is isolated. This method involves removal and reinstallation of rear panel cables.

If none of the elements on the HP-MSIB can communicate, either a module is disrupting the entire HP-MSIB, the HP 70001A mainframe or HP 70004A color display HP-MSIB circuits are faulty, or the display element has a faulty HP-MSIB interface and the utility is giving erroneous results. Use the following steps to further isolate the problem.

1. If an abnormal screen display is present, refer to the *HP 70001A Service Guide* or *HP 70004A Service Guide* and to the appropriate display element service manual for further troubleshooting and repair information.
2. If flashing error indicators occur, the faulty element or HP 70001A mainframe/HP 70004A color display may be isolated by using the steps given below.
   a. If a module is under test, turn the HP 70001A mainframe or HP 70004A color display OFF.
   b. Remove the element from the HP-MSIB by removing the module or by disconnecting the HP-MSIB cables from a stand-alone element.
   c. Turn the system power off, then on again.
   d. If the problem is gone, the element is faulty. Refer to the appropriate service manual or technical reference manual for further troubleshooting and repair information.
   e. If the problem remains, repeat Steps a through d on each module until the faulty element has been isolated. If none of the elements is faulty, the HP 70001A mainframe or HP 70004A color display is faulty. Refer to the *HP 70001A Service Guide* or *HP 70004A Service Guide* for further troubleshooting and repair information.

Module Removal Method

This method involves removing one module at a time until the faulty module, HP 70001A mainframe or HP 70004A color display is isolated. Because it uses flashing error lights to isolate the problem, this method cannot be used to troubleshoot when the only symptom is an abnormal screen display.

If the error indicator of only one element flashes at a 1 Hz rate, that element cannot communicate over the HP-MSIB and is probably faulty.

If the error indicators of more than one module are flashing, either the HP 70001A mainframe or HP 70004A color display HP-MSIB is faulty or a faulty module is disrupting the entire HP-MSIB. It is possible for a module to disrupt the entire HP-MSIB without having its error indicator flash.

Remove the modules that have flashing error indicators one at a time.

If all of the error indicators stop flashing when a module is removed, that module is faulty. For additional troubleshooting and repair information, refer to “Repair Procedures”.

If no modules appear to be faulty, the problem is with the HP 70001A mainframe or HP 70004A color display. Refer to the *HP 70001A Service Guide* or *HP 70004A Service Guide* for further troubleshooting and repair information.

For information on reconnecting the modules after troubleshooting, see the *HP 70000 Modular Spectrum Analyzer Installation and Verification Manual.*

Repair Procedures

If a module or instrument in an HP 70000 Series modular spectrum analyzer system requires repair, the customer may choose to do the repair, or return the module or instrument to the nearest Hewlett-Packard service office.

Repair by Customer

This section discusses where the customer who chooses to do his own repairs can locate assembly- or component-level repair information.

Support information is available for HP 70000 Series modular spectrum analyzer systems and lightwave signal analyzers. This section explains where to locate repair information.

Module-Level Support

For instructions for returning a faulty module to Hewlett-Packard, refer to the *HP 70000 Modular Spectrum Analyzer Installation and Verification Manual.*

Assembly/Component-Level Support

For assembly-level troubleshooting information and ordering information for both new and exchange assemblies, refer to the appropriate technical reference, service manual, or component level information package (CLIP).

CAUTION Repairs should be performed only at a static-safe work station. Refer to the *HP 70000 Modular Spectrum Analyzer Installation and Verification Manual.*

Note Defective units must be returned for trade-in when ordering exchange units.

CAUTION Do not apply more than 8 inch-pounds maximum torque (finger tight) when reinstalling any connector (for example, BNC, SMA). The connector may be damaged.

System or Module Repair by Hewlett-Packard

This section explains the options for repair of a module or instrument that are provided by Hewlett Packard. Explanations of the available service support options are given below.

All products have a one-year warranty. Refer to the *HP 70000 Modular Spectrum Analyzer Installation and Verification Manual* for instructions on returning an instrument for service.

On-Site Service Option

On-site service for modular measurement systems is available in many areas. Contact a Hewlett-Packard sales representative for on-site service availability and terms information.

Additional Service Options

Additional service options that supplement the standard "Return to Hewlett-Packard" service support may be available. Contact a Hewlett-Packard sales representative for availability and terms information.

6

Error Messages

Representative error messages for HP 70000 Series modular spectrum analyzer systems are listed on the following pages. For information about error messages not listed here, refer to the installation and verification manual for the element that is generating the error.

These error messages are grouped by functional category each category has its own series of numbers. A definition of the functional category is given at the beginning of each error message listing.

Types	Numbers
User Application	0001—0999
Operating	2000—2999
Hardware-Warning	6000—6999
Hardware-Broken	7000—7999
Computation	8000—8999
Factory Use Only	9000—9999

The spectrum analyzer displays error messages, which can also be retrieved via HP-IB by executing the `ERR?` programming command.

Operating, hardware-warning, hardware-broken, and computation error messages report the element model number and HP-MSIB address of the module that is generating the error condition.

User Application Errors 0001 – 0999

The numbers 0001—0999 are reserved for error messages that are created for user-application programs and loaded into RAM.

Error Messages for System Diagnostics

One example of a user-application program is "System Diagnostics," a down-loadable program (DLP) designed by Hewlett-Packard. The system diagnostics error messages are listed below. These diagnostic error messages range from 0001 – 0070.

The asterisk (*) printed before some of the following error code messages indicates that the program stops until the error is no longer being generated. The asterisk does not appear on the display screen.

Note When a customer-designed down-loadable program is used, any error numbers assigned to the program should not duplicate system diagnostics error numbers.

*0001

`NO LO?`

Cause: The program cannot find an HP 70900B local oscillator source at row address 0.

Cure: Check and correct the HP-MSIB switches on the HP 70900B local oscillator source.

*0002

`HP-MSIB addr 70902`

Cause: The HP-MSIB address of the HP 70902A IF section does not follow addressing rules.

Cure: The recommended address of the HP 70902A IF section is in row 2 and the same column as the HP 70900B local oscillator source.

*0003

`HP-MSIB addr 70903`

Cause: The HP-MSIB address of the HP 70903A IF section does not follow addressing rules.

Cure: The recommended address of the HP 70903A IF section is in row 4 and the same column as the HP 70900B local oscillator source.

*0004

`HP-MSIB addr 70904`

Cause: The HP-MSIB address of the HP 70904A RF section does not follow addressing rules.

Cure: The recommended address of the HP 70904A RF section is in row 6 and the same column as the HP 70900B local oscillator source.

*0005

`HP-MSIB addr 70905/6`

Cause: The HP-MSIB address of the HP 70905A RF section or HP 70906A RF section does not follow addressing rules.

Cure: The recommended address of the HP 70905A RF section or the HP 70906A RF section is in row 6 and the same column as the HP 70900B local oscillator source.

*0007

`21.4MHz daisy chain`

Cause: The IF Section's 21.4 MHz rear panel daisy-chain cables are incorrectly connected.

Cure: The 21.4 MHz OUT of the 70903A connects to the 21.4 MHz IN of the HP 70902A IF section. The VIDEO OUT of the HP 70902A IF section connects to the VIDEO IN of the HP 70903A IF section.

*0008

`NO RF SECTION?`

Cause: The program cannot find an RF section module.

Cure: Install an RF section in the system, or correct the HP-MSIB switch settings on the currently installed RF section.

*0009

`NO I.F. SECTION?`

Cause: The program cannot find an IF Section.

Cure: Install an IF Section in the system, or correct the HP-MSIB switch settings on the currently installed IF Section.

*0010

`HP-MSIB addr 70907`

Cause: The HP-MSIB address of the HP 70907A/B external mixer interface module does not follow the addressing rules.

Cure: The recommended address of the HP 70907A/B external mixer interface module is in row 5 and the same column as the HP 70900B local oscillator source.

*0011

`No EMIM Section?`

Cause: The program cannot find an HP 70907A/B external mixer interface module.

Cure: Install an EMIM in the system, or correct the HP-MSIB switch settings on the currently installed EMIM. This error will not occur in Revision C.00.00 and later.

*0012

`HP-MSIB addr 70600`

Cause: The HP-MSIB address of the Preselector does not follow the addressing rules.

Cure: The recommended address of the Preselector is in row 2 and the column immediately to the right of the HP 70900B local oscillator source.

*0013

`No PRESELECTOR?`

Cause: The program cannot find a Preselector configured to the HP 70900B local oscillator source.

Cure: Install a Preselector in the system, or correct the HP-MSIB switch settings on the currently installed preselector.

*0014

`Incorrect System`

Cause: The system selected to be tested requires modules which are not present in the system.

Cure: Select another configured system, or reconfigure your system to match the selection. This error will not occur in Revision C.00.00 and later.

*0015

`HP-MSIB addr 70700`

Cause: The HP-MSIB address of the HP 70700A digitizer does not follow the addressing rules. The program can test the HP 70700A digitizer only when it is configured as a slave to the HP 70900B local oscillator source.

Cure: The recommended address of the HP 70700A digitizer is in row 3 and the same column as the HP 70900B local oscillator source.

*0020

`21.4MHz input cable`

Cause: The program cannot find the rear panel 21.4 MHz input signal for the HP 70902A IF section.

Cure: Check the 21.4 MHz OUT connection on the rear panel of the RF section going to the 21.4 MHz IN connection on the rear panel of the HP 70903A IF section if present, otherwise the 21.4 MHz IN on the rear panel of the HP 70902A IF section. If this cable is connected properly, it might be defective.

*0021

`Video output cable`

Cause: The rear panel VIDEO OUT signal from the HP 70902A IF section is not getting to the VIDEO input of the HP 70900B local oscillator source or 70903A.

Cure: Check the rear panel VIDEO OUT connection on the HP 70902A IF section. Be sure it is routed properly and the cable is not defective.

0022

`LC bandwidths`

Cause: The signal amplitude of the HP 70902A IF section is too low when it is set to the LC bandwidths (10 to 300 kHz).

Cure: The LC filters in the HP 70902A IF section require adjustment or repair.

0023

`CRYSTAL bandwidths`

Cause: The signal amplitude of the HP 70902A IF section is too low when it is set to the crystal bandwidths (10 Hz to 3 kHz).

Cure: The crystal filters in the HP 70902A IF section require adjustment or repair.

0024

`Problem/ampl low?`

Cause: The signal amplitude of the HP 70902A IF section is too low in both the LC and Xtal bandwidths. The program stops testing the HP 70902A IF section when this error is generated.

Cure: Check the connection at the 21.4 MHz IN on the rear panel of the HP 70902A IF section. Be sure the cable is routed correctly and is not defective. If this does not remedy the problem, the HP 70902A IF section 21.4 MHz Input Filter requires adjustment or repair.

0025

`Step gain amplifier`

Cause: The gain of one or more of the step gain amplifiers of the HP 70902A IF section is incorrect.

Cure: The step gain amplifiers in the HP 70902A IF section require adjustment or repair.

0026

`Res BW-accuracy`

Cause: The HP 70902A IF section resolution bandwidth is incorrect.

Cure: The bandwidth filter adjustments in the HP 70902A IF section should be performed. If this does not remedy the problem, repair the HP 70902A IF section LC or crystal bandwidth filters.

0027

`Res BW-amplitude`

Cause: The amplitude variation between the resolution bandwidths of the HP 70902A IF section is too large.

Cure: The bandwidth filter adjustments in the HP 70902A IF section should be performed. If this does not remedy the problem, repair the HP 70902A IF section LC or crystal bandwidth filters.

0028

`Calibration atten`

Cause: The calibration attenuator of the HP 70902A IF section is not functioning correctly.

Cure: The calibration attenuators in the HP 70902A IF section require adjustment or repair.

0029

`Log amplifier`

Cause: The log amplifier of the HP 70902A IF section is not functioning correctly.

Cure: Perform the HP 70902A IF section log amplifier adjustment. If this does not remedy the problem, refer to the *HP 70902A IF section Service Manual* for procedures to repair the log amplifier or replace the thick-film log amplifier microcircuits.

*0030

`21.4MHz input cable`

Cause: The program cannot find the rear panel 21.4 MHz input signal for the HP 70903A IF section.

Cure: Check the 21.4 MHz OUT connection on the rear panel of the RF section going to the 21.4 MHz IN connection on the rear panel of the HP 70903A IF section. If this cable is connected properly, it might be defective.

*0031

`Video output cable`

Cause: The rear panel VIDEO OUT signal of the HP 70903A IF section is not getting to the HP 70900B local oscillator source VIDEO input.

Cure: Check the rear panel VIDEO OUT connection on the HP 70903A IF section. Be sure it is routed properly to the HP 70900B local oscillator source and the cable is not defective.

0032

`LC board`

Cause: The HP 70903A IF section LC board signal amplitude is too low.

Cure: Perform the HP 70903A IF section LC filter adjustments or the HP 70903A IF section step gain adjustment. If these do not remedy the problem, the A1 LC filter assembly requires repair.

0033

`Log board`

Cause: The 70903A IF Section log board signal amplitude is too low.

Cure: Perform the HP 70903A IF section log amplifier adjustments. If this does not remedy the problem, the A2 Log Amplifier Assembly requires repair.

0034

`Problem/ampl low?`

Cause: The HP 70903A IF section internal 21.4 MHz IF signal amplitude is too low. The program stops testing the HP 70903A IF section when this error is generated.

Cure: Perform the HP 70903A IF section module adjustments. It is likely either the A1 LC wideband filter or A2 log amplifier/power supply requires repair.

0035

`Step gain amplifier`

Cause: The gain of the step gain amplifier of the HP 70903A IF section is incorrect.

Cure: The step gain amplifiers in the HP 70902A IF section require adjustment or repair.

0036

`Res BW-accuracy`

Cause: One or more of the HP 70903A IF section resolution bandwidths are not the correct value.

Cure: The bandwidth filter adjustments in the HP 70903A IF section should be performed. If this does not remedy the problem, repair the HP 70903A IF section LC bandwidth filters.

0037

`Res BW-amplitude`

Cause: The amplitude variation between the HP 70903A IF section resolution bandwidths is too large.

Cure: The bandwidth filter adjustments in the HP 70903A IF section should be performed. If this does not remedy the problem, repair the HP 70903A IF section LC bandwidth filters.

0038

`Calibration atten`

Cause: One or more of the calibration attenuators of the HP 70903A IF section are not functioning correctly.

Cure: The calibration attenuators in the HP 70903A IF section require adjustment or repair.

0039

`Log amplifier`

Cause: The log amplifier of the HP 70903A IF section is not functioning correctly.

Cure: Perform the HP 70903A IF section log amplifier adjustment. If this does not remedy the problem, refer to the *HP 70903A IF section Service Manual* for procedures to repair the log amplifier.

0040

`Tune+Span`

Cause: The Tune + Span level is incorrect or the system cable is missing.

Cure: Check to ensure the Tune + Span cable is connected from the HP 70900B local oscillator source LO to all modules that require it. SMB tee adapters may be required to daisy-chain this signal.

0041

`RF attenuator`

Cause: The HP 70907A/B external mixer interface module internal attenuator is not functioning correctly.

Cure: Test and, if necessary, replace the HP 70907A/B external mixer interface module input attenuator.

*0042

`Cal/I.F. cables?`

Cause: The front panel CALIBRATOR output of the HP 70900B local oscillator source is not connected to the RF INPUT of the RF section (a prerequisite for running the program), or the rear panel 21.4 MHz output of the RF section is not connected to the IF Section.

Cure: The marker reading was less than −60 dBm and the RF section 21.4 MHz diagnostic detector indicated a low signal condition. This could be caused by no calibrator signal applied to the RF section input, no 21.4 MHz cable connected to the RF section rear panel 21.4 MHz output, or a defective RF section. Check for these conditions to remedy the problem.

*0043

`Problem/ampl low?`

Cause: The signal amplitude of the RF section is too low. The marker reading was less than −20 dBm but greater than −60 dBm and the RF section 21.4 MHz diagnostic detector indicated a low signal condition. The program stops testing when this error is generated.

Cure: This could be caused by no 21.4 MHz cable connected to the RF section rear panel 21.4 MHz output, or excessive loss in the signal path of the RF section. Check for these conditions to remedy the problem.

0044

`Low/high band switch`

Cause: The low/high band switch of the RF section is not functioning correctly.

Cure: This error occurs when a signal is detected in one setting of the high-low band coaxial switch but not the other. This switch is the most likely cause of this error. Test and replace if necessary.

0045

`RF attenuator`

Cause: The RF attenuator of the RF section is not functioning correctly.

Cure: Test and replace the RF Attenuator if necessary

0046

`Step gain amplifier`

Cause: The gain of the step gain amplifier of the HP 70908A RF section is incorrect. This error occurs if the 10 dB step gain amplifier in the HP 70908A RF section fails its test.

Cure: This amplifier is located in the last converter assembly of the HP 70908A RF section. The last converter assembly should be tested and repaired as required.

0050

`Res BW -- CF`

Cause: The resolution bandwidth center frequency of one or more of the 70902A IF Sections is out of adjustment.

Cure: Perform the HP 70902A IF section Resolution Bandwidth Filter adjustments.

0051

`Res BW -- CF ampl`

Cause: The resolution bandwidth of one or more of the HP 70902A IF sections is out of adjustment.

Cure: Perform the HP 70902A IF section Resolution Bandwidth Filter adjustments.

0052

`Res BW -- CF ampl`

Cause: The resolution bandwidth center frequency of one or more of the HP 70903A IF sections is out of adjustment.

Cure: Perform the HP 70903A IF section Resolution Bandwidth Filter adjustments.

0053

`Res BW -- CF ampl`

Cause: The resolution bandwidth of one or more of the HP 70903A IF sections is out of adjustment.

Cure: Perform the HP 70903A IF section Resolution Bandwidth Filter adjustments.

0060

`RF attenuator`

Cause: The RF attenuator of the HP 70600A preselector or the HP 70601A preselector is not functioning correctly.

Cure: Check and replace the RF Attenuator in the HP 70600A preselector or HP 70601A preselector.

0061

`Cannot test 70905/6B`

Cause: These RF sections can only be tested with an associated HP 70600A preselector or an HP 70601A preselector, as part of a preselected microwave spectrum analyzer system.

0062

`Cal input incorrect?`

Cause: The front panel CALIBRATOR output of the HP 70900B local oscillator source is not connected to the RF INPUT of the system being tested. (This is a prerequisite for running the program.)

Cure: This error indicates that the marker reading of the signal was less than −60 dBm and the 21.4 MHz diagnostic detector indicated a low signal condition. Check that the calibrator signal from the HP 70900B local oscillator source is connected to the RF Input of the RF section or the preselector. If the calibrator is connected, check the RF signal path in the RF section for excessive loss.

0063

`ATTENUATOR Section`

Cause: One or more of the RF attenuator sections in the HP 70600A preselector or the HP 70601A preselector is not functioning correctly.

Cure: Check and replace the RF Attenuator in the HP 70600A preselector or HP 70601A preselector.

0064

`RF Switch 1`

Cause: This RF switch in the HP 70600A preselector or the HP 70601A preselector is not functioning properly.

Cure: Check A3S1 and replace if required.

0065

`RF Switch 2`

Cause: This RF switch in the HP 70600A preselector or the HP 70601A preselector is not functioning properly.

Cure: Check A4S2 and replace if required.

0066

`RF Switch 3`

Cause: This RF switch in the HP 70600A preselector or the HP 70601A preselector is not functioning properly.

Cure: Check A5S3 and replace if required.

0067

`RF Switch 4`

Cause: This RF switch in the HP 70600A preselector or the HP 70601A preselector is not functioning properly.

Cure: Check A6S4 and replace if required.

0068

`RF Switch 1`

Cause: The HP 70620 or HP 70621 has failed its switch diagnostic #1. If the preamplifier is an HP 70620A preamplifier, S4 or its associated drive circuitry has failed. If the preamplifier is an HP 70620B preamplifier or an HP 70621A preamplifier, K1 or its associated drive circuitry has failed.

Cure: Troubleshoot and replace the failed component if necessary.

0069

`RF Switch 2`

Cause: The HP 70620A preamplifier has failed its switch diagnostic #2. This indicates S1 or its associated drive circuitry has failed. This error applies to the HP 70620A preamplifier only.

Cure: Troubleshoot and replace the failed component if necessary.

0070

`RF Preamplifier`

Cause: The HP 70621A preamplifier or HP 70620B preamplifier Option 001 RF preamplifier has failed its diagnostic test. This error will occur if the signal level gain through the RF preamplifier path at 300 MHz is less than or equal to 0 dB.

Cure: The most likely failure is the RF preamplifier microcircuit. Troubleshoot and repair this component and its power supply.

Operating Errors 2000 – 2999

Operating errors occur when the spectrum analyzer is operated incorrectly.

2000

`No errors`

Cause: This message is returned from querying the system when no error is present in the system.

2001

`Illegal command`

Cause: The remote command sent over the bus or executed as part of a DLP was not a legal remote command. This error could also occur if a User Variable (VARDEF), which did not exist, was used as a parameter in a remote command. Check for missing terminators, and the proper number of parameters. Also verify that delimited strings have are properly ended.

Cure: Use the DEBUG command to locate the programming error. Refer to the DEBUG command description in the *HP 70000 Modular Spectrum Analyzer Programming Manual*.

2002

`Illegal parameter`

Cause: This is a user-generated system protocol error.

2003

`Missing parameter`

Cause: The command being executed requires more parameters than were provided, or a user variable VARDEF used as a parameter for a function was not found.

Cure: Use the DEBUG command to locate the programming error. Refer to the *HP 70000 Modular Spectrum Analyzer Programming Manual*.

2004

`Illegal character`

2005

`Illegal character set`

2006

`Parm out of range`

Cause: A change was made to an instrument setting that was beyond the capabilities of the hardware. This could be remote, DLP, or front panel changes.

Cure: Use the DEBUG command to locate the programming error. Refer to the *HP 70000 Modular Spectrum Analyzer Programming Manual*.

2007

`Missing terminator`

2008

`Output unleveled`

2009

`Protocol error`

Cause: Internal error due to illegal communication. Due to hardware failure.

Cure: Please document all details possible that lead up to the error and contact your HP representative

2010

`Cmd out of sequence`

Cause: Internal error due to process synchronization. Possible hardware failure.

Cure: Please document all details possible that lead up to the error and contact your HP representative.

2011

`Memory overflow`

Cause: There is not enough available memory for the operation. Examples would be adding a VARDEF, FUNCDEF, or ACTDEF sending AMPCOR data adding new modules to a system that was almost out of memory because of FUNCDEF's, and so forth

Cure: Some items must be removed from memory. Analyze DLP's to see if there are extra characters (spaces, and so forth) that could be removed. Expanded memory options for the Local Oscillator are also available.

2011

`A Hardware Selected`

Cause: This is notification that a service mode has been enabled. The system is overriding the automatic configuration and operating as if the hardware is the "A" version of the HP 70900B local oscillator source LO module.

Cure: The power must be cycled to restore the automatic mode.

2012

`B Hardware Selected`

Cause: This is notification that a service mode has been enabled. The system is overriding the automatic configuration and operating as if the hardware is the "B" version of the HP 70900B local oscillator source LO module.

Cure: The power must be cycled to restore the automatic mode.

2013

`Item not found` or `XXXXX not found`

The `XXXXX` will be replaced by the name of the item that was not found.

Cause: A request was made to operate on an item in memory that was not located.

Cure: Use the DEBUG command to locate the programming error. Refer to the *HP 70000 Modular Spectrum Analyzer Programming Manual*.

2014

`Duplicate identifier`

Cause: A variable, trace, or DLP name matches a reserved spectrum analyzer command.

Cure: Use the DEBUG command to locate the programming error. Refer to the *HP 70000 Modular Spectrum Analyzer Programming Manual*.

2015

`Too many entries`

Too many user definitions

Cause: More entries have been made in an internal table then was reserved. The most common time this will occur is having too many entries in the Limit Line Table.

Cure: Use the LIMILINE command to allocate more space for limit line entries.

2016

`Label too long`

Cause: A user generated key label that has more than 14 characters, or a FUNCDEF, VARDEF, or ACTDEF with more than 12 characters will generate this error.

Cure: The system will truncate the text to the correct number of characters and execute the requested function. Use the DEBUG command to locate the programming error. Refer to the *HP 70000 Modular Spectrum Analyzer Programming Manual*.

2018

`State protected`

Cause: This error occurs if a user stored instrument state that is protected was requested to be removed from memory. The state will not be removed. Also, if the number of user states is reduced using NSTATE, all states above the requested number will be deleted. If any of those states were protected, the NSTATE command will be ignored and this error will occur.

Cure: Unprotect any states no longer needed.

2019

`Illegal marker type`

Cause: The command executed does not apply to the marker mode of the markers on the display. For example, if a normal marker is on screen, and the "Marker delta into span" function is activated, the function cannot be executed, and the error will occur.

Cure: Refer to the programming or operation manual for the function being executed to determine the proper marker type for the operation.

2020

`No active marker`

Cause: This error occurs when Marker Delta is moved to Center Frequency Step Size (MKSS) while no markers are active.

2021

`Bad IF/ENDIF nesting`

Cure: Use the DEBUG command to locate the programming error. Refer to the *HP 70000 Modular Spectrum Analyzer Programming Manual*.

2022

`REPEAT/UNTIL error`

Cure: Use the DEBUG command to locate the programming error. Refer to the *HP 70000 Modular Spectrum Analyzer Programming Manual*.

2023

`Illegal Cal signal`

Cause: Calibration signal did not match.

2024

`Illegal HP-MSIB comm`

Illegal HP-MSIB communication

Cause: An HP-MSIB protocol violation has occurred.

Cure: Document all steps leading up to the error condition and contact your HP representative.

2025

`System error (slave)`

Cause: HP-MSIB communications with a slave module has created this error.

Cure:

- Record the error number and the hexadecimal code.
- Record all events that led up to the occurrence of the error message.
- Record the HP model numbers of the modules in the system.
- Record the firmware version.

- Contact the nearest HP Sales and Service Office for assistance.

2026

`Check mixer bias`

2027

`Service mode -- do IP`

Cause: This is a user-generated system protocol error. The bandwidth or reference select is not in their AUTO modes. (For service use only.)

2028

`Idler is unlocked`

2029

`Command syntax error`

Cause: This error is generated when MSIB packet syntax is incorrect, or when a BDLP call is does not have the proper syntax.

Cure: Please document all the steps that led up to this error and contact your HP representative.

2030

`Scaling overflow`

Cause: The user has requested a scale factor that is too large in the DWINDOW command.

Cure: Refer to the DWINDOW command description in the *HP 70000 Modular Spectrum Analyzer Programming Manual* for limits.

2031

`Too many errors`

Cause: The error buffer has been filled.

2032

`Hardware not present`

Cause: A function was requested that required hardware not available in the system.

Cure: Use the DEBUG command to locate the programming error. Refer to the *HP 70000 Modular Spectrum Analyzer Programming Manual*.

2033

`Single band only`

Cause: The SIGID command requires that the trace be in a single microwave band.

Cure: Adjust the start or the stop frequency so that the trace does not span more than a single band.

2034

`Test switch on`

Cause: The module test switch is in the "test" position. All RAM is erased at each power cycle.

Cure: Set the module test switch to the "normal" position.

2035

`Illegal operation`

2036

`HP-IB multiple cntlr`

Cause: A DLP used an OUTPUT command or the spectrum analyzer attempted to access the disk when another device had control of the HP-IB.

Cure: Remove the other device from the HP-IB.

2037

`No instr resp`

Cause: No HP-IB instrument response from an OUTPUT command or mass storage (such as SAVE or RECALL) to an HP-IB disk.

Cure: Verify that the HP-IB address is correct.

2038

`Span÷trace too large`

Cause: There are too few data points for the span requested.

Cure: Reduce the span or increase the number of trace points.

2039

`User stack overflow`

Cause: There is not enough RAM space remaining for the operation requested. Often nested DLPs are calling too deeply. For example, DLP "A" calls DLP "B" which calls DLP "C", and so forth.

Cure: DLP program should be redesigned using fewer nesting levels.

2040

`Partial USTATE data`

Cause: A recalled user state is not complete.

2041

`CAL POWER lvl err`

CAL power level error

Cause: The calibration signal level is not sufficient for system calibration.

Cure: Increase the signal level. −10 dBm is optimum.

2042

`Not stored, A–X->A on`

Cure: Use the DEBUG command to locate the programming error. Refer to the *HP 70000 Modular Spectrum Analyzer Programming Manual*.

2043

`LINEAR not allowed`

Cure: Use the DEBUG command to locate the programming error. Refer to the *HP 70000 Modular Spectrum Analyzer Programming Manual*.

2044

`Not stored: open 1st`

Cause: The data for the short is entered before the data for the open when normalizing for swept response.

Cure: Store the data for the open first. Refer to the STORREF command.

2045

`HP-IB bus error`

Cause: HP-IB protocol violation.

Cure: Verify cables and computer for proper operation.

2046

`No DAC in this band`

Cause: There is no preselector in the current band.

Cure: Verify the start and stop frequencies and see the manual for operation ranges.

2047

`Preselector disabled`

Cause: The preselector was bypassed while the peak command was executed.

Cure: Select the preselector path before executing the peak command.

2048

`Userdef protected`

Cause: User-defined function or (USER) key is protected.

Cure: Use the DEBUG command to locate the programming error. Refer to the DEBUG command description in the *HP 70000 Modular Spectrum Analyzer Programming Manual*.

2049

`Battery failed`

Cause: The battery backed up RAM was not valid.

Cure: Return to Hewlett-Packard for servicing.

2050

`Ampcr/span too large`

Amplitude-correction data too large

2051

`File not found`

Cause: A user state was not found in memory.

Cure: Check the state number or name.

2052

`File already exists`

2053

`storage device`

2054

`write protect`

Cause: Mass storage device is write protected.

2055

`bad file`

Cause: File can not be read.

2056

`bad revision`

Cause: A recalled state is from a different firmware revision and cannot be used.

2057

`volume full`

Cause: The mass storage device is full.

Cure: Remove some files from the mass storage device.

2058

`bad volume`

2059

`directory full`

Cause: The directory of the mass storage device is full.

Cure: Remove some files from the mass storage device.

2060

`New 70810 ROMs req`

Cause: This LO firmware revision requires the latest HP 70810B lightwave section firmware to make lightwave measurements.

2802

`Illegal in LW mode`

Cause: The last command sent to the HP 70810B lightwave section is legal in bypass mode only.

Cure: Change the HP 70810B lightwave section to the bypass mode before using this command.

2803

`Illegal in bypass`

Cause: The last command sent to the HP 70810B lightwave section is legal in lightwave mode only.

Cure: Change the HP 70810B lightwave section to the lightwave mode before using this command.

Hardware Warning Errors 6000 – 6999

Hardware-warning errors occur when the hardware is faulty. The spectrum analyzer can still make measurements, but the accuracy of the measurement cannot be guaranteed.

6000

`EAROM unprotected`

Cause: The memory-enable write switch is set to the WRITE position. It is not set to the PROTECT position.

Cure: Set the memory-enable write switch to the PROTECT position.

6001

`Confidence test passed`

6002

`A6 RAM checksum (battery)`

6003

`FFS won't tune low`

6004

`FFS won't tune high`

6005

`Idler tuning range`

6006

`YTO tuning range`

6007

`MSIB NMAA received`

HP-MSIB "no module at address" received

Cause: The module attempted to establish communication with a module at an incorrect address. The system responded with an NMAA (no module at address).

Cure: If using MSIB communication, verify the address if the module you are trying to communicate with is correct. Otherwise, document all steps that led to the error condition and contact your HP representative.

6008

`Confidence test failed`

6009

`No module label`

6010

`Err in MDOC response`

Cause: An error in module-output capabilities response has occurred.

Cure: Return to Hewlett-Packard for servicing.

6011

`RBW hardware error`

Resolution bandwidth hardware error

Cause: The resolution bandwidth filters were not able to be calibrated.

Cure: Return to Hewlett-Packard for servicing.

6012

`Gain hardware error`

Cause: The amplifiers were not able to be calibrated.

Cure: Return to Hewlett-Packard for servicing.

6013

`LOGAMP hardware error`

Cause: The log amplifiers were not able to be calibrated.

Cure: Return to Hewlett-Packard for servicing.

6014

`PLL error`

Phase-lock loop is unlocked and/or the loop-tuning voltage is near its limit. The internal or external frequency reference source is not close enough to 1, 2, 5, or 10 MHz for the HP 70310A precision frequency reference to operate, or a hardware failure exists.

6015

`Oven cold`

The HP 70310A precision frequency reference's Oven/Oscillator assembly has not reached normal operating temperature of approximately 85° C, and there is no external frequency reference applied. If the error appears at power-up when the instrument has been off for more than fifteen minutes and then disappears after the instrument has been on for fifteen to twenty minutes, the most probable causes are:

- the external power pack has an open fuse

- the external power pack is not properly connected
- the external power pack is faulty
- the HP 70310A precision frequency reference module has faulty hardware

Note At ambient temperatures below the specified operating range of the module, the oven may not be able to generate enough power to keep itself at approximately 85° C.

6016

`freq reference`

No internal oven/oscillator is present and no external frequency reference is applied.

6017

`6214 GHz error`

6018

`PGA gain sum high`

6019

`PGA gain sum low`

6802

`Invalid cal data`

Cause: The EAROM data installed during the manufacturing process may not be valid.

Cure: Return to Hewlett-Packard for servicing.

6805

`Firmware Changed`

Cause: The HP 70810B lightwave section firmwave version is of a different date code than was installed in the module the last time it was turned on. All optical power calibration data previously stored by the user in module memory has been lost.

Cure: Perform a calibration on the HP 70810B lightwave section.

Hardware Broken Errors 7000 – 7999

Hardware-broken errors occur when the spectrum analyzer might have faulty hardware.

7000

`ROM Check error`

Cause: The programmed checksum of the ROM does not agree with the computed checksum.

Cure: This could only be caused by a hardware failure. Return to Hewlett-Packard for servicing.

7001

`LO unleveled`

7002

`First LO unleveled`

7003

`Second LO unlocked`

7004

`300 MHz error`

7005

`321.4 MHz error`

7006

`21.4 MHz error`

7007

`Cal error`

Calibration error.

7008

`FFS handshake`

Fractional-frequency-source handshake error

Cause: Communication has been lost to the Frequency Synthesizer portion of the 70900 module. This is very likely due to a hardware failure.

Cure: Return to Hewlett-Packard for servicing.

7009

`ROM 2 check error`

7010

`FFS is unlocked`

Fractional-frequency-source is unlocked

Cause: The frequency synthesizer is not able to acquire phase lock. If an external frequency reference is being used, verify that the frequency is accurate. If not, it is likely that the LO hardware has failed.

Cure: Correct external frequency reference accuracy or return to Hewlett-Packard for servicing.

7011

`125 KZ to FFS`

125 kHz to fractional frequency source error

Cause: The internal 125 kHz reference signal is not at the correct power level on the Fractional Frequency Synthesizer assembly. This error will only occur on power up of the system, or when the TEST command is invoked, either from the front panel or remotely.

Cure: Return to Hewlett-Packard for servicing.

7012

`Cannot lock YTO`

Cannot lock YIG-tuned oscillator

Cause: The Local Oscillator cannot acquire phase lock. If an external frequency reference is being used, verify that the frequency is accurate. If not, it is likely that the LO hardware has failed or is in need of calibration.

Cure: Verify the external reference frequency is operating correctly. If it is, return the LO module to Hewlett-Packard for servicing.

7013

`Can't finetune YTO`

Cannot fine-tune YIG-tuned oscillator

Cause: The Local Oscillator cannot be adjusted for proper operation. Module service or calibration is required.

Cure: Return to Hewlett-Packard for servicing.

7014

`12.5 MZ to YTO LK BD`

12.5 MHz to YIG-tuned oscillator lock board error

Cause: The internal 12.5 MHz reference signal is not at the correct power level on the YTO phase lock board. This error will only occur on power up of the system, or when the TEST command is invoked, either from the front panel or remotely.

Cure: Return to Hewlett-Packard for servicing.

7015

`YTO unleveled` YIG-tuned oscillator unleveled

Cause: The leveling amplifier for the Local Oscillator output is not able to generate the proper output level. This error will only occur on power up of the system, or when the TEST command is invoked, either from the front panel or remotely.

Cure: Return to Hewlett-Packard for servicing.

7016

`YTO is unlocked`

YIG-tuned oscillator is unlocked

Cause: During a sweep of the local oscillator, phase lock was lost. If an external frequency reference is being used, its accuracy should be verified.

Cure: Verify external reference accuracy. If no external reference is being used, module service or calibration is necessary. Return to Hewlett-Packard for servicing.

7017

`External ref (100 MZ)`

External 100 MHz reference error

Cause: The detector used to automatically switch between an internal and external reference is not operating properly. This error will only occur on power up of the system, or when the TEST command is invoked, either from the front panel or remotely.

Cure: Return to Hewlett-Packard for servicing.

7018

`50 MZ to sampler`

50 MHz to sampler error

Cause: The internal 50 MHz sampler drive signal is not at the correct power level at the sampler. This error will only occur on power up of the system, or when the TEST command is invoked, either from the front panel or remotely.

Cure: Return to Hewlett-Packard for servicing.

7019

`300 MZ post fltr det`

300 MHz post-filter detector error

Cause: The internal 300 MHz reference signal is not at the correct power level after the filter stage. This error will only occur on power up of the system, or when the TEST command is invoked, either from the front panel or remotely.

Cure: Return to Hewlett-Packard for servicing.

7020

`300 MZ AGC`

300 MHz automatic gain control error

Cause: The gain control voltage on the 300 MHZ signal has reached a limit. This error will only occur on power up of the system, or when the TEST command is invoked, either from the front panel or remotely.

Cure: Return to Hewlett-Packard for servicing.

7021

`600 MZ doubler level`

600 MHz doubler level error

Cause: The 600 MHz internal reference signal amplitude is not correct. This error will only occur on power up of the system, or when the TEST command is invoked, either from the front panel or remotely.

Cure: Return to Hewlett-Packard for servicing.

7022

`Low idler range`

Cause: The internal "Idler" oscillator did not acquire phase lock at the low end of its operating range. This error will only occur on power up of the system, or when the TEST command is invoked, either from the front panel or remotely.

Cure: Return to Hewlett-Packard for servicing.

7023

`High idler range`

Cause: The internal "Idler" oscillator did not acquire phase lock at the high end of its operating range. This error will only occur on power up of the system, or when the TEST command is invoked, either from the front panel or remotely.

Cure: Return to Hewlett-Packard for servicing.

7024

`Tune DAC` Tune the digital-to-analog converter

Cause: The DAC that tunes the YIG oscillator is not operating properly. This error will only occur on power up of the system, or when the TEST command is invoked, either from the front panel or remotely.

Cure: Return to Hewlett-Packard for servicing.

7025

`Decade span atten`

Decade spanwidth attenuator error

Cause: The DAC that generates the scaled voltage for sweeping the YIG oscillator is not operating properly. This error will only occur on power up of the system, or when the TEST command is invoked, either from the front panel or remotely.

Cure: Return to Hewlett-Packard for servicing.

7026

`Binary span atten`

Binary span width attenuator error

Cause: The DAC that scales the tune voltage to sweep the YIG oscillator is not operating properly. This error will only occur on power up of the system, or when the TEST command is invoked, either from the front panel or remotely.

Cure: Return to Hewlett-Packard for servicing.

7027

`Sweep dac`

Digital-to-analog converter sweep error

Cause: The DAC that generates the system sweep ramp is not operating properly. This error will only occur on power up of the system, or when the TEST command is invoked, either from the front panel or remotely.

Cure: Return to Hewlett-Packard for servicing.

7028

`Correction dac`

Correction digital-to-analog converter

Cause: The DAC that fine tunes the phase lock circuit for the EYO is not operating properly. This error will only occur on power up of the system, or when the TEST command is invoked, either from the front panel or remotely.

Cure: Return to Hewlett-Packard for servicing.

7029

`Video proc: 0 volt`

Video processor: 0 volt error

Cause: The video processor is not able to be properly calibrated to the 0 volt reference. This error will only occur on power up of the system, or when the TEST command is invoked, either from the front panel or remotely.

Cure: Return to Hewlett-Packard for servicing.

7030

`Video proc: 2 volt`

Video processor: 2 volt error

Cause: The video processor is not able to be properly calibrated to the 2 volt reference. This error will only occur on power up of the system, or when the TEST command is invoked, either from the front panel or remotely.

Cure: Return to Hewlett-Packard for servicing.

7031

`Idler is unlocked`

Cause: The local oscillator is not able to acquire phase lock.

Cure: Verify an external reference if applicable, otherwise the module will need to be returned to Hewlett-Packard for servicing.

7032

`Oven RF error`

The HP 70310A precision frequency reference accessory oven is not providing a signal, is providing a low signal, or is providing a signal when it should not be.

7033

`Power supply error`

One or more of the +5 V, −12 V, or −5 V voltages are out of spec.

7034

`Dist amp A error`

Either the input to the HP 70310A precision frequency reference Distribution Amplifier "A" board assembly is beyond the specified operating range, or a hardware failure exists. The most probable causes are either: (a) one or more outputs are unleveled due to faulty HP 70310A precision frequency reference hardware, or (b) an input that is too low in power.

7035

`Dist amp B error`

Either the input to the HP 70310A precision frequency reference Distribution Amplifier "B" board assembly is beyond the specified operating range, or a hardware failure exists. The most probable causes are either: (a) one or more outputs are unleveled due to faulty HP 70310A precision frequency reference hardware, or (b) an input that is too low in power.

7036

`HP-MSIB error`

7041

`FFS won't tune low`

Fractional frequency source cannot tune low

Cause: The frequency synthesizer will not acquire lock at the lowest end of its operating range. This error will only occur on power up of the system, or when the TEST command is invoked from the front panel or remotely.

Cure: If an external frequency reference is being used, its accuracy should be verified. If the reference is good, there is a hardware failure. The module must be returned to Hewlett-Packard for servicing.

7042

`FFS won't tune high`

Fractional frequency source cannot tune high

Cause: The frequency synthesizer will not acquire lock at the highest end of its operating range. This error will only occur on power up, or when the TEST command is invoked, either remotely or from the front panel.

Cure: If an external frequency reference is being used, its accuracy should be verified. If the reference is good, there is a hardware failure. The module must be returned to Hewlett-Packard for servicing.

7043

`Freq board adjust`

Frequency-board adjust

Cause: The Frequency control board is out of calibration. This error will only occur on power up of the system, or when the TEST command is invoked, either from the front panel or remotely.

Cure: Return to Hewlett-Packard for servicing.

7044

`YTO tuning range`

YIG-tuned oscillator tuning range

Cause: The YIG oscillator is not able to be tuned over the necessary range. This error will only occur on power up of the system, or when the TEST command is invoked, either from the front panel or remotely.

Cure: Return to Hewlett-Packard for servicing.

7045

`10 MHz out error`

The HP 70310A precision frequency reference 10 MHz OUT signal is absent or too low. The most probable cause is faulty HP 70310A precision frequency reference hardware.

7046

`Illegal bandslct cde`

Illegal band-select code

Cause: The Internal/External Frequency reference switch was set to an illegal position

Cure: Please document all steps taken that led to this error condition and contact your HP representative.

7047

`RAM failure`

Cause: The RAM self test detected a failure in the system RAM.

Cure: Return to Hewlett-Packard for servicing.

7048

`FFS won't unlock`

Cause: The module self test tunes the synthesizer to a frequency outside it's operating range to verify the lock detector is operating properly. The synthesizer never indicated an unlock condition.

Cure: Return to Hewlett-Packard for servicing.

7050

`Hardware config fail`

Cause: On power up of the system a test of the hardware is made to verify the hardware matches the model revision ("A" or "B"). If this test is not conclusive, this error will occur.

Cure: If an external frequency reference is being used, verify the proper accuracy. Return to Hewlett-Packard for servicing.

7073

`Tune+Span disconnect`

7074

`Discriminator unlock`

7075

`LOLA unleveled`

7076

`MULT unleveled`

7077

`YTF drive error`

7078

`Tune/Span error`

7079

`EEPROM check error`

Cause: This hardware error occurs when the controller has determined that the EEPROM memory is invalid. Either the EEPROM is defective or the data in the EEPROM must be reloaded.

Cure: Return to Hewlett-Packard for servicing.

7801

`Optical atten failed`

Cause: The optical attenuator cannot achieve a given setting. Automatic periodic zeroing temporarily modifies the attenuator setting, so this error can occur without a user attempt to change attenuation.

Cure: Return to Hewlett-Packard for servicing.

7802

`ADC error`

Cause: The analog digital converter (ADC) in the power meter is not responding.

Cure: Return to Hewlett-Packard for servicing.

7803

`Power meter failed`

Cause: The power meter circuitry has failed during the self test.

Cure: Return to Hewlett-Packard for servicing.

7804

`Self test failed`

Cause: The self test checks the functionality of the power meter and optical attenuator.

Cure: Return to Hewlett-Packard for servicing.

7805

`Zeroing error`

Cause: Photodiode dark current cannot be nulled.

Cure: Check for a hardware problem such as excessive noise on the photodiode, or catastrophic failure in the power meter circuitry.

Computation Errors 8000 – 8999

Computation errors occur during illegal math operations. For all of these computation errors, use the DEBUG command to locate the programming error. Refer to the *HP 70000 Modular Spectrum Analyzer Programming Manual*.

8000

`Divide by zero`

8001

`Float pt overflow`

Floating-point overflow. Absolute value of number exceeds $1.797,693,134,862,315 \times 10^{308}$.

8002

`Log of zero`

8003

`Log of negative`

8004

`Integer overflow`

Number is less than –32,768 or greater than 32,767.

8005

`Square root error`

8006

`Modulus of zero`

8999

`Float pt underflow`

Floating-point underflow. Number is between 0 and $\pm 2.225,073,858,507,202 \times 10^{-308}$.

Factory-Use Only Errors 9000 – 9999

These errors are for factory use only. If any of the 9000 – 9999 errors occurs,

1. Record the error number and the hexadecimal code.
2. Record all events that led up to the occurrence of the error message.
3. Record the HP model numbers of the modules in the system.
4. Record the firmware version.
5. Contact the nearest HP Sales and Service Office for assistance.

A

Theory of Operation

Spectrum Analyzer

The HP 70000 Series modular spectrum analyzer systems are superheterodyne receivers, which are electronically tuned by applying an adjustable saw-tooth voltage ramp to a voltage-tuned local oscillator (LO). The input signal is mixed with a signal from the LO, the output of the mixer is amplified, filtered, detected, and then converted to digital values which are stored in the spectrum analyzer.

Stored measurement results can be retrieved several ways. If the spectrum analyzer is connected to a display (for example, HP 70004A color display, HP 70205A graphics display or HP 70206A system graphics display), measurement results can be displayed. Measurement results can also be monitored with a computer. Figure A-1 illustrates the basic spectrum analyzer functions.

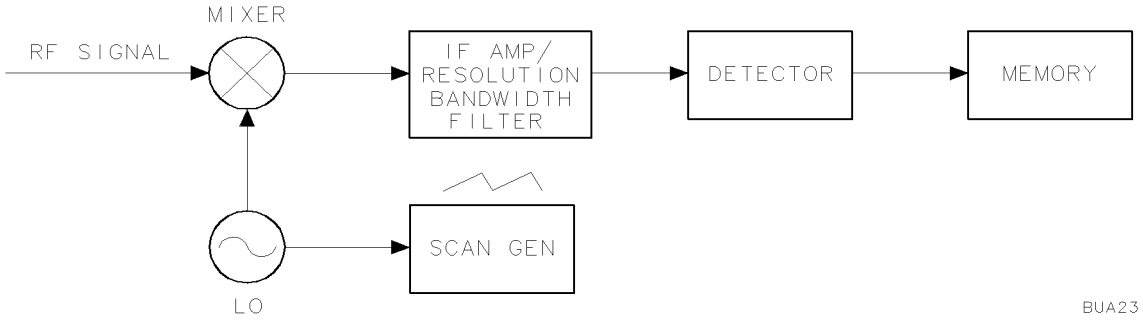

Figure A-1. Simplified Spectrum Analyzer Block Diagram

For an input signal, F_S, the LO frequency is tuned so that

$$F_{LO} - F_S = F_{IF}$$

where

F_{LO} is the local oscillator frequency

F_S is the tuning frequency (displayed response)

F_{IF} is the mixing product

When this equation is satisfied, the input signal can be detected.

When the full voltage range of the sweep ramp is applied to the local oscillator, it sweeps through its frequency range, yielding a wide range of frequencies at the mixer output. However, since the intermediate-frequency (IF) amplifier passes only frequencies within its passband, measured spectrum for a continuous-wave signal is simply a plot of the passband of the resolution bandwidth filters in the IF amplifier.

Refer to the Figure A-3 for an overview of the modules that are available for an HP 70000 Series modular spectrum analyzer system.

Lightwave Signal Analyzer

The HP 70000 Series modular lightwave signal analyzer system combines a photoreceiver module, an HP 70810B lightwave section, with an HP 70000 Series modular spectrum analyzer system. A standard HP 71400C lightwave signal analyzer is a combination of an HP 70810B lightwave section and an HP 71210C microwave spectrum analyzer. A standard HP 71401C lightwave signal analyzer is a combination of an HP 70810B lightwave section and an HP 71100C modular spectrum analyzer. Other modules are added to the standard lightwave signal analyzers to enhance the capabilities of the system. Refer to the Figure A-3 for an overview of the modules that are available for an HP 70000 Series modular lightwave signal analyzer system.

A lightwave signal analyzer displays the total average power and modulation, or base band spectrum, of an optical input signal. Figure A-2 illustrates a basic lightwave signal analyzer. Modulated light enters the HP 70810B lightwave section through a singlemode-fiber front panel connector. The light is expanded, collimated, and passed through an optical attenuator that is controllable over a 30 dB range in 1 dB steps. The attenuator can be used to prevent front-end overload.

The collimated light is then focused onto a PIN photodetector. Electron-hole pairs are generated by the light in the photodetector, producing a photocurrent. The dc photocurrent is measured by an average power meter and amplified by a 100 kHz to 22 GHz preamplifier. The preamplifier amplifies the signal by 32 dB to improve the sensitivity of the analyzer. The amplified signal passes to the input of the HP 70000 Series modular spectrum analyzer system that has been mated with the lightwave section. The detected modulation, or base-band spectrum, is then processed and displayed.

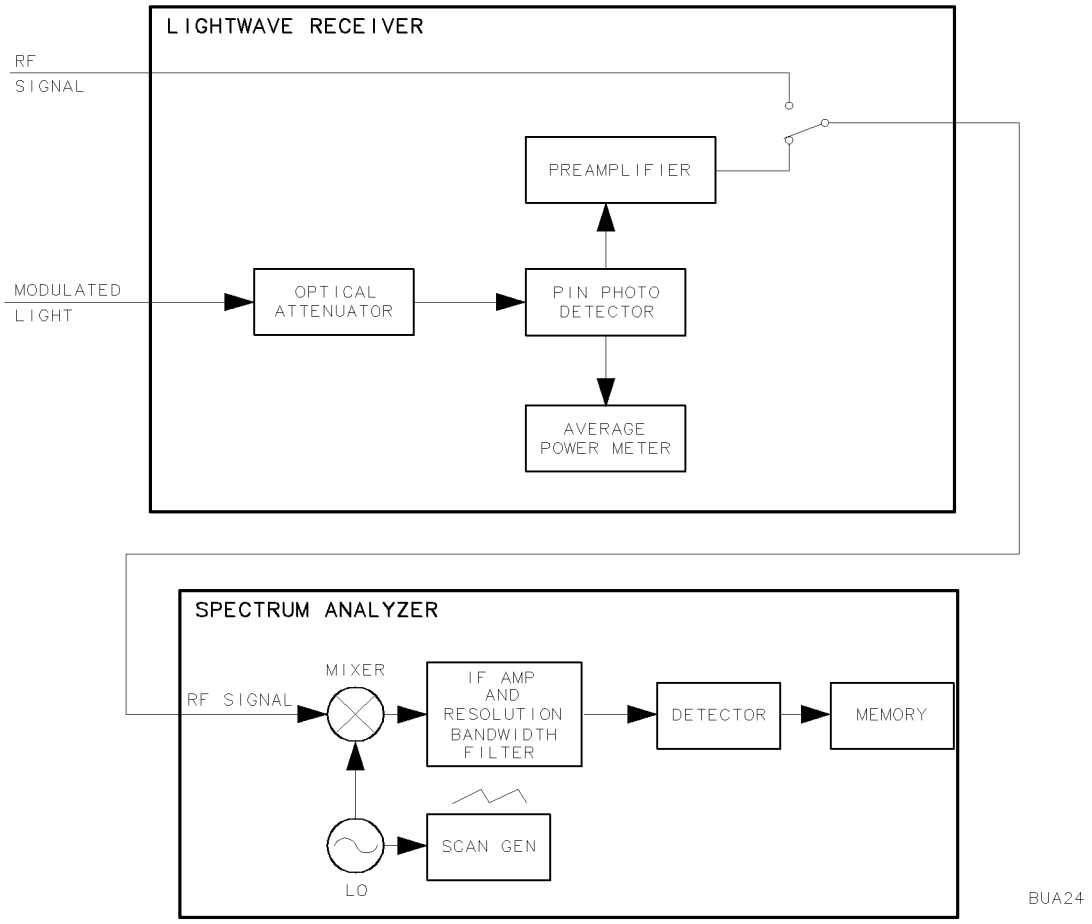

Figure A-2. Simplified Lightwave Signal Analyzer Block Diagram

Modular Spectrum Analyzer and Lightwave Signal Analyzer Block Diagrams

Figure A-3 provides an overview of an HP 70000 Series modular spectrum analyzer system with an HP 70900B local oscillator source as the master controller. Modules that are available as part of an HP 70000 Series modular spectrum analyzer system or lightwave signal analyzer are detailed in the Figure A-3 footnotes.

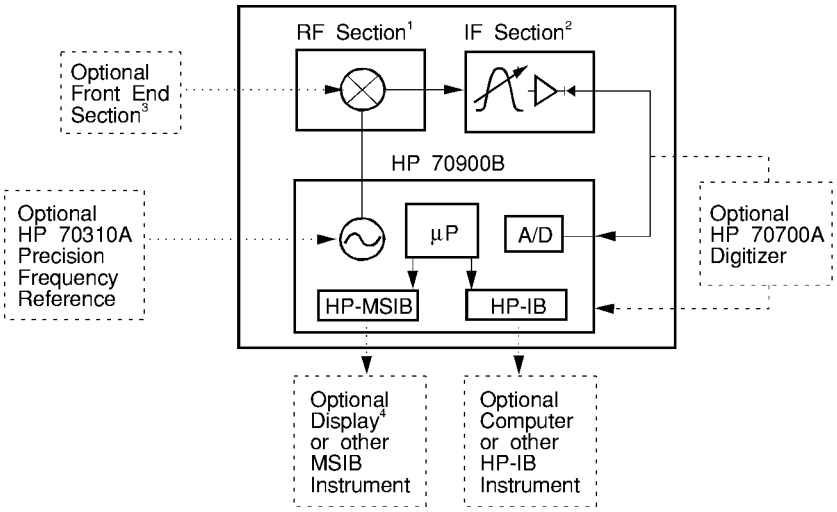

1 Includes HP 70904A RF section/HP 70905A/B RF section/HP 70906A/B RF section/ HP 70908A RF section

2 Includes HP 70902A IF section/HP 70903A IF section

3 Includes HP 70600A preselector/HP 70601A preselector (not compatible an HP 70908A RF section) and HP 70620B preamplifier/HP 70621A preamplifier/HP 70810A/B lightwave section/HP 70907B external mixer interface module

4 Includes HP 70004A color display/HP 70205A graphics display/HP 70206A system graphics display

Figure A-3. Modular Analyzer Configuration Block Diagram

Figure A-4 provides an overview of a modular source created by connecting an HP 70900B local oscillator source and a tracking generator module.

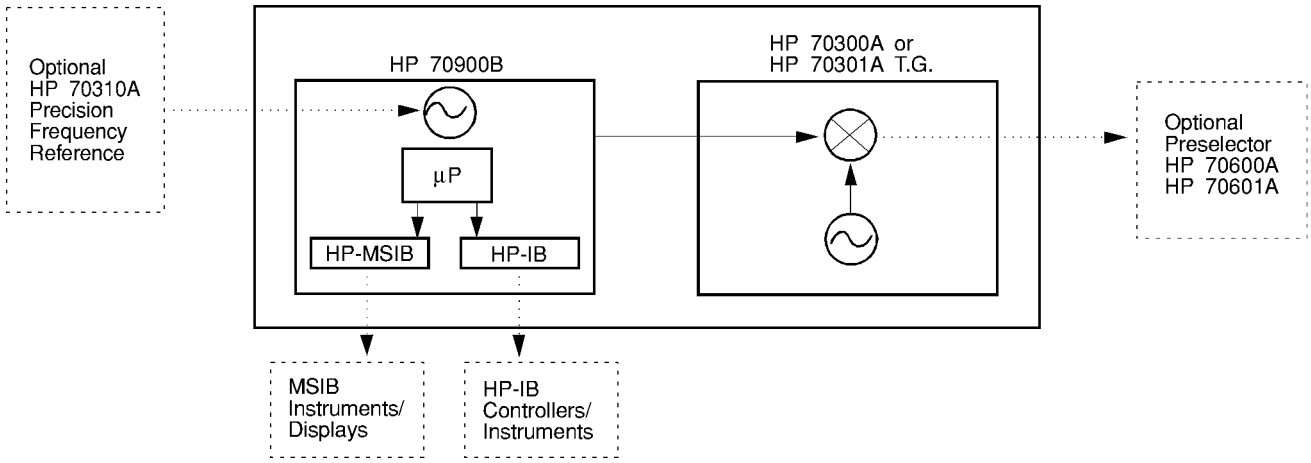

Figure A-4.
Modular Source
Configuration Block Diagram

Individual Module Block Diagrams

The individual module diagrams, Figure A-5 through Figure A-20, illustrate basic module functions and the signal path through each module. The block diagrams, starting with Figure A-5, are organized so that the signal path through a modular system can be followed sequentially. Identify the block diagrams that match the modules in your system and follow the signal path from one block diagram to the next. Figure A-3 provides an overview of how individual modules are connected in a modular analyzer system.

Appendix B describes the inputs and outputs on an individual spectrum analyzer and lightwave signal analyzer modules. A brief description of each module is also included.

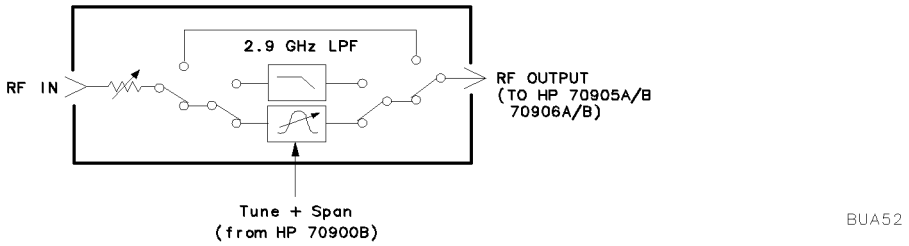

Figure A-5. HP 70600A/70601A Preselector Block Diagram

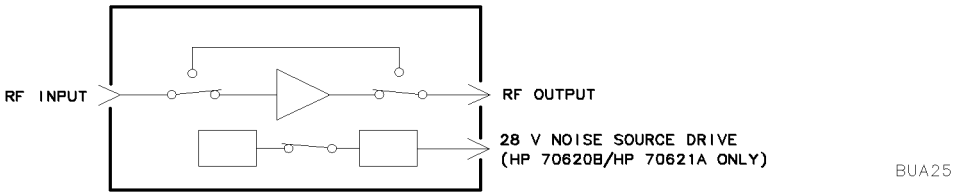

Figure A-6. HP 70620A/B Preamplifier/HP 70621A Preamplifier Block Diagram

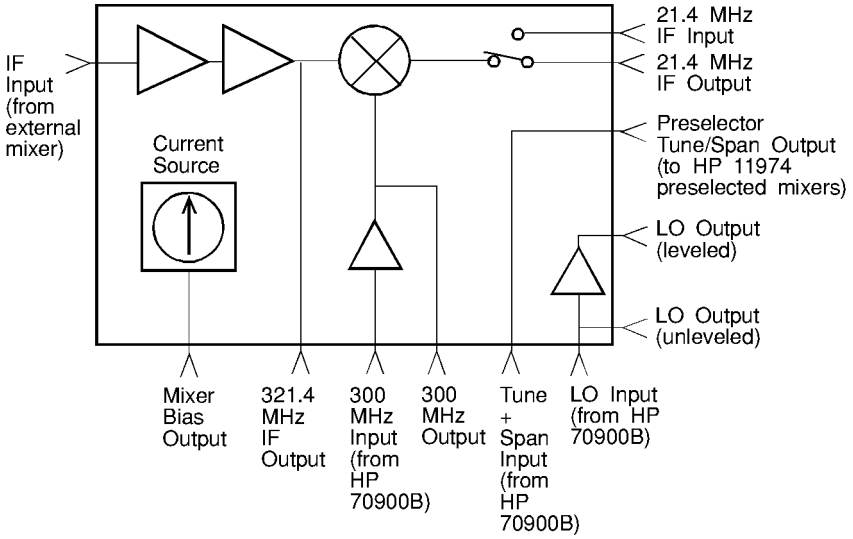

Figure A-7. HP 70907A External Mixer Interface Module Block Diagram

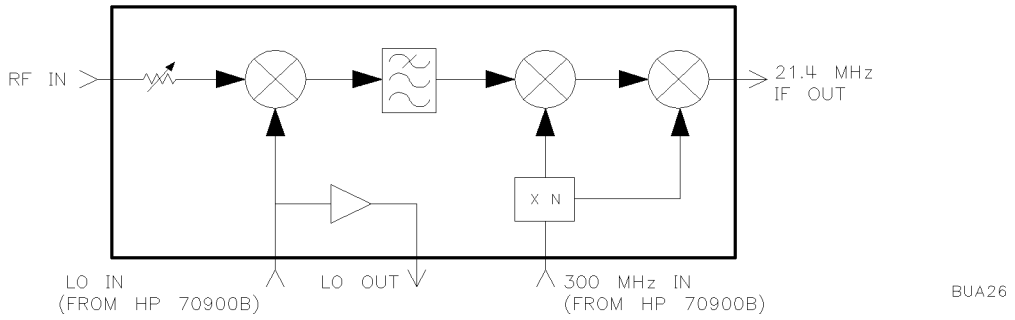

Figure A-8. HP 70904A RF Section Block Diagram

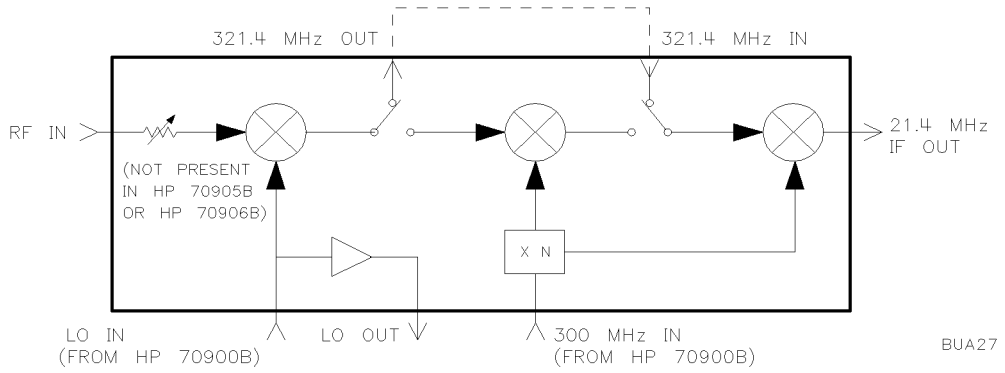

Figure A-9. HP 70905A/905B/906A/906B RF Section Block Diagram

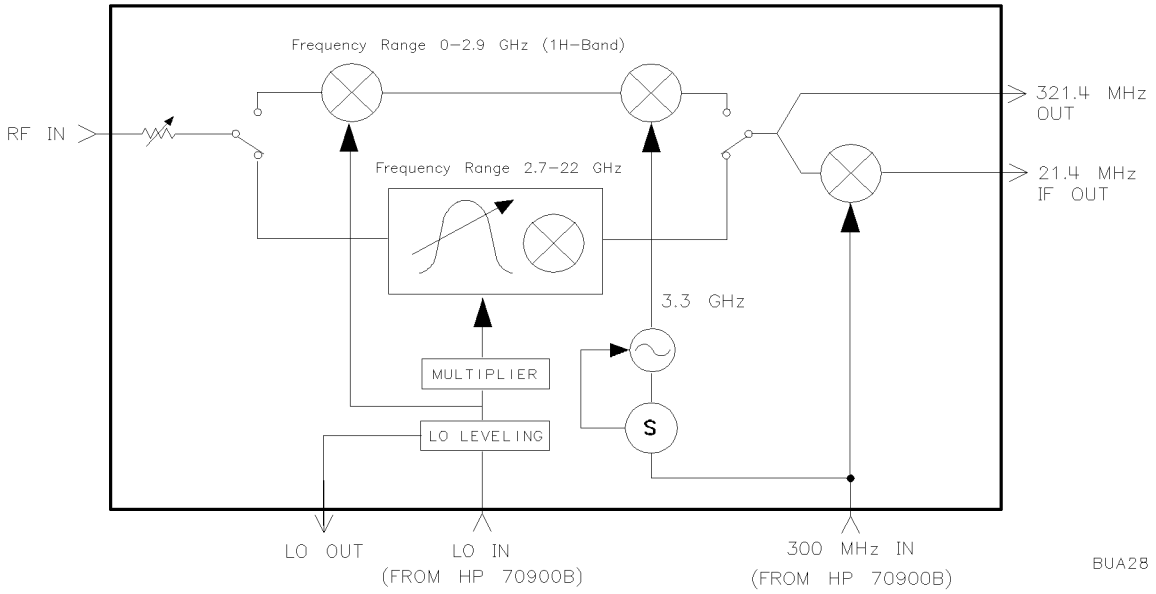

Figure A-10. HP 70908A RF Section Block Diagram

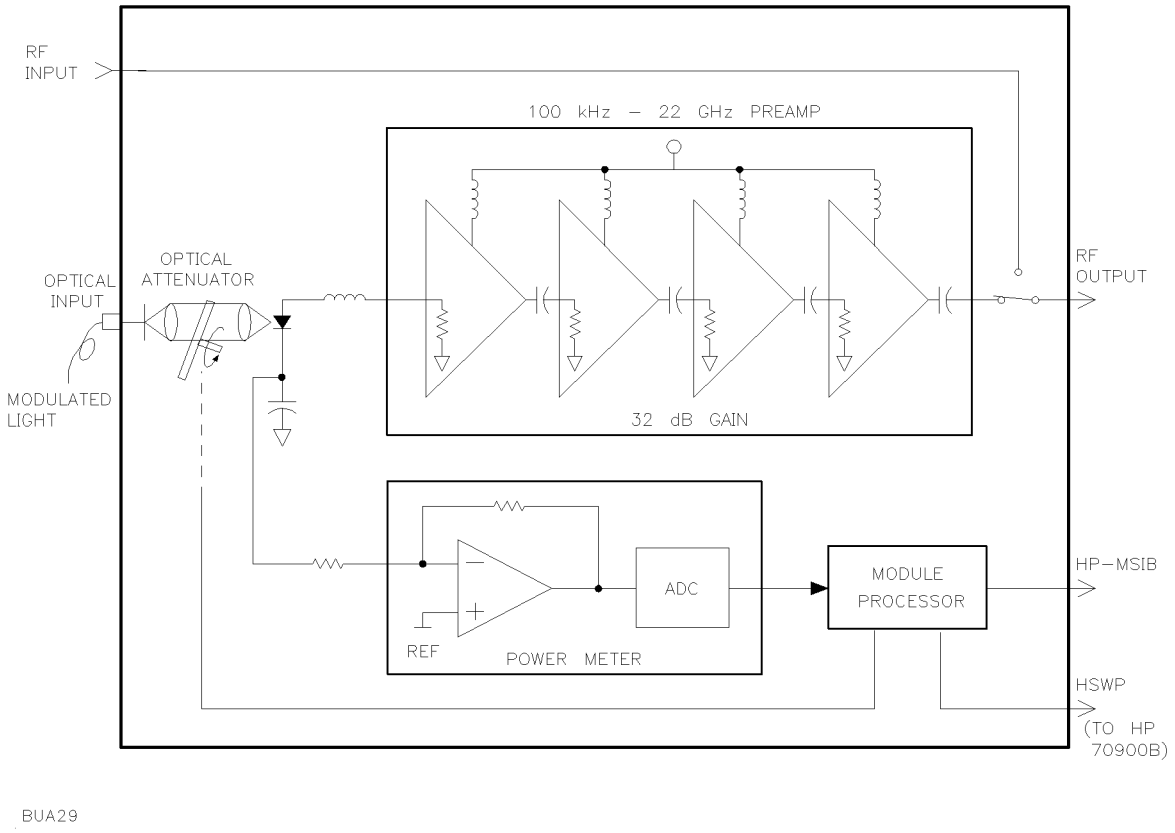

Figure A-11. HP 70810B Lightwave Section Block Diagram

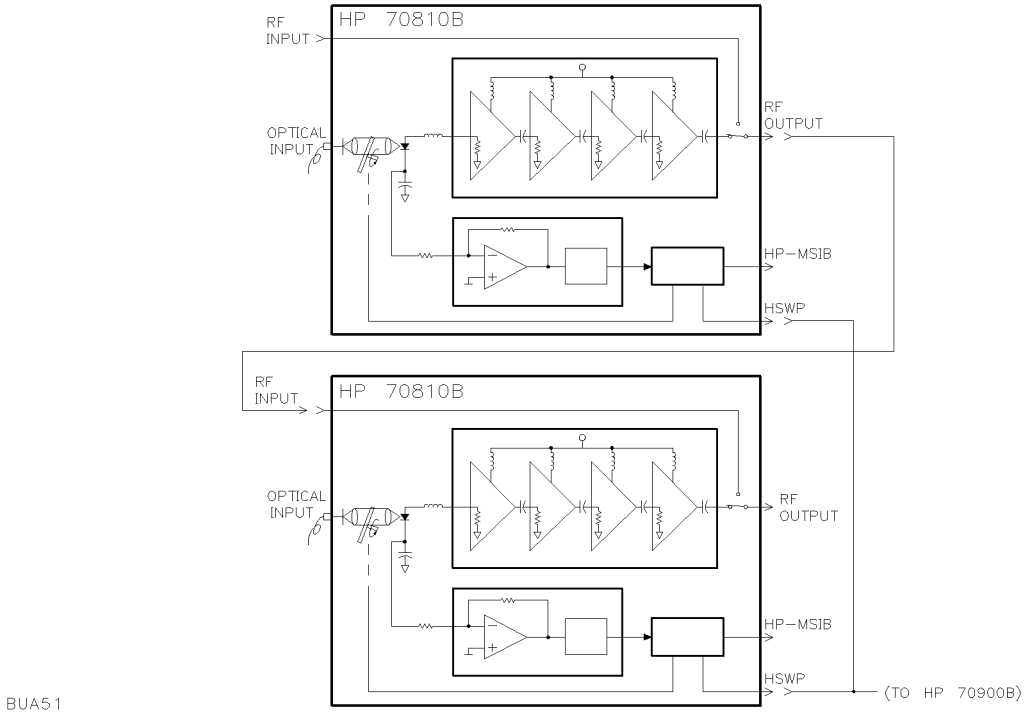

Figure A-12. Dual HP 70810B Lightwave Section Block Diagram

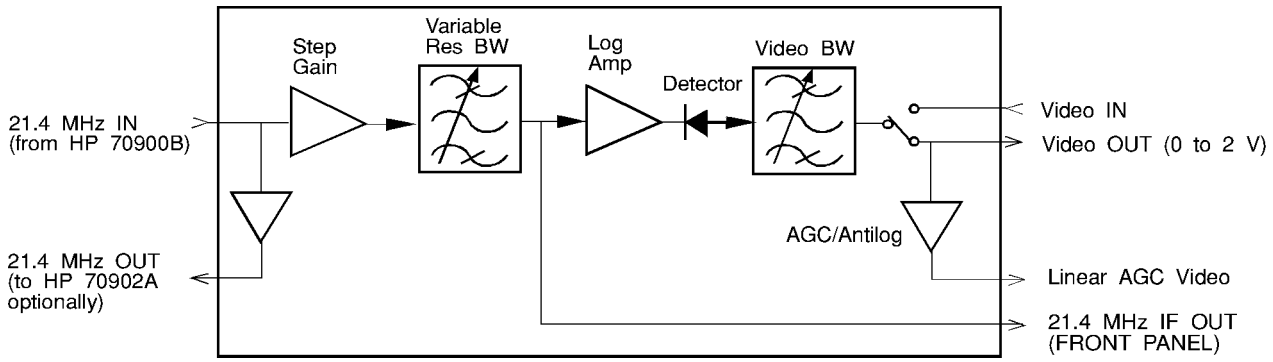

Figure A-13. HP 70903A IF Section Block Diagram

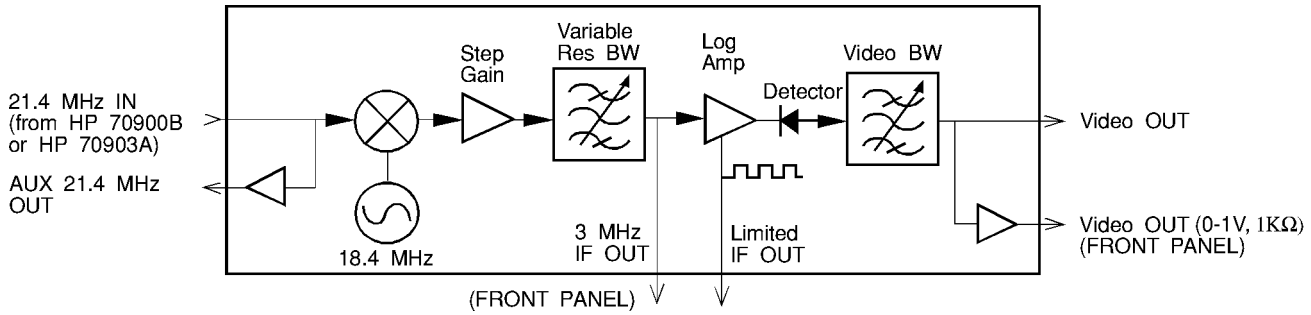

Figure A-14. HP 70902A IF Section Block Diagram

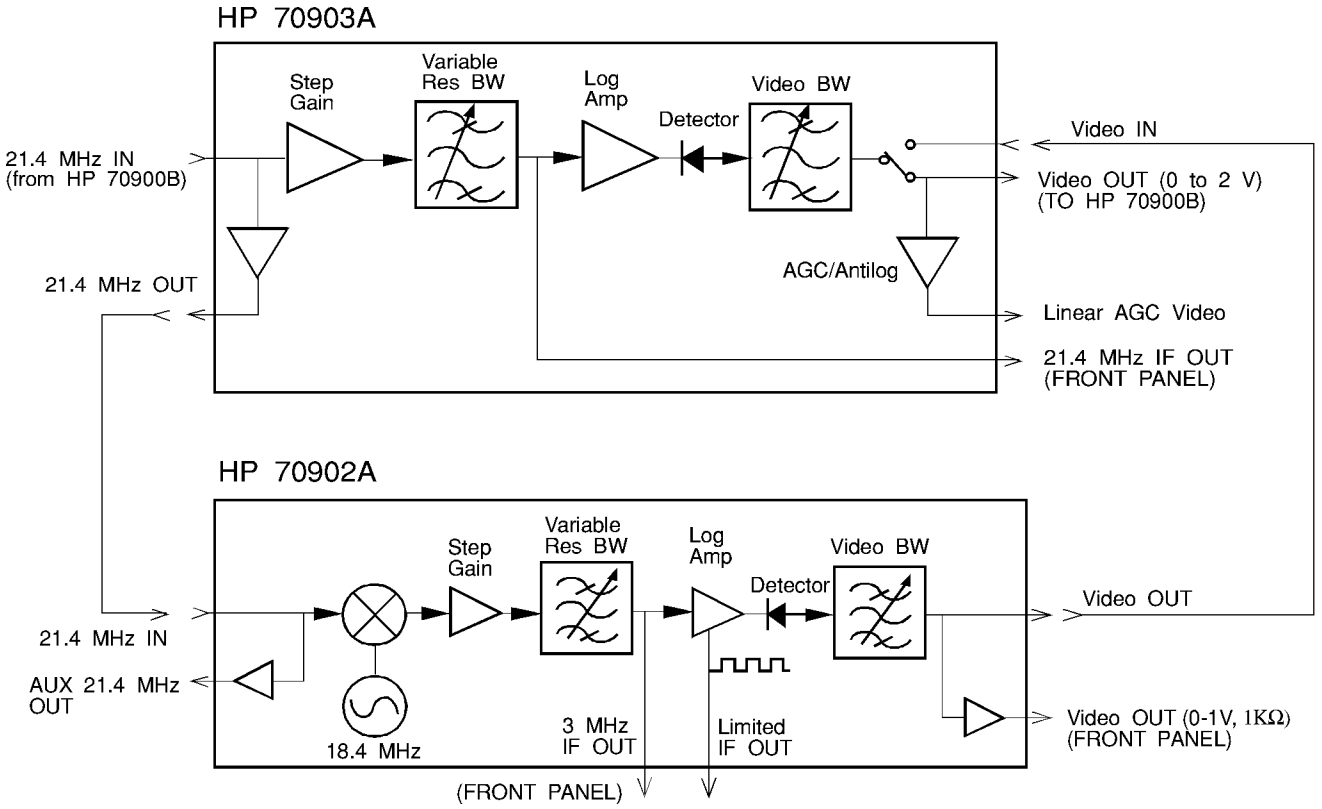

Figure A-15.
HP 70902A IF Section and HP 70903A IF Section Interconnection Block Diagram

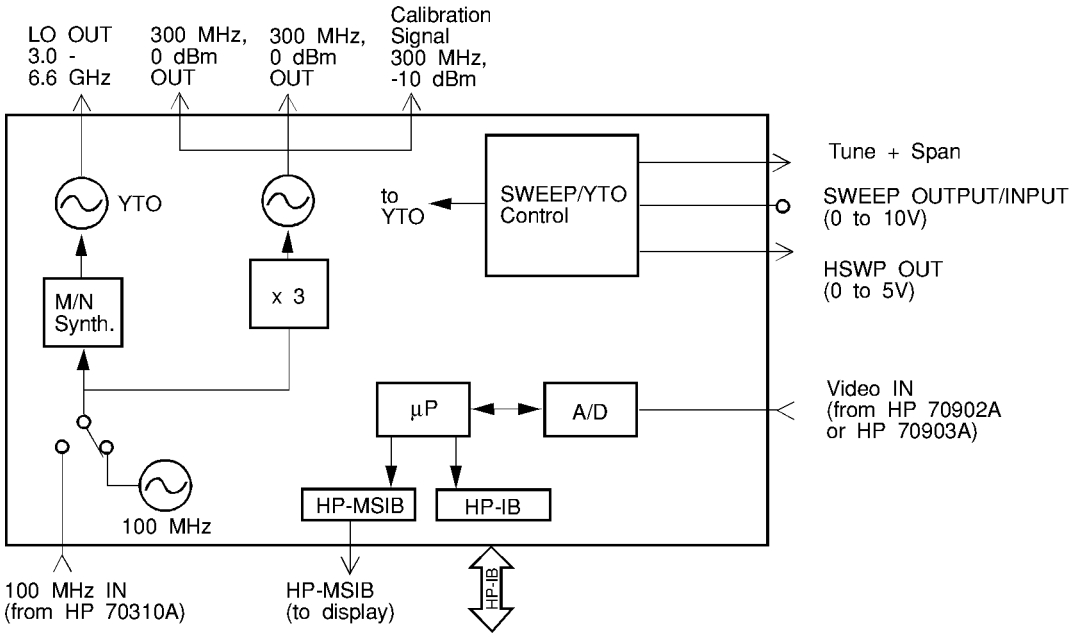

Figure A-16. HP 70900B Local Oscillator Source Block Diagram

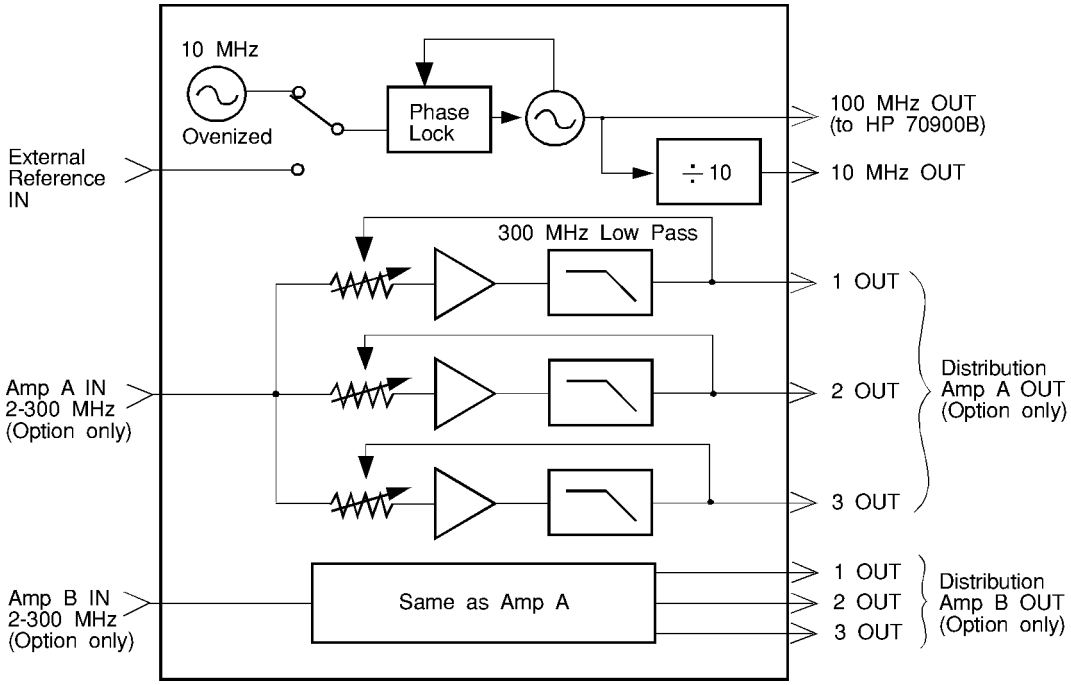

Figure A-17. HP 70310A Precision Frequency Reference Block Diagram

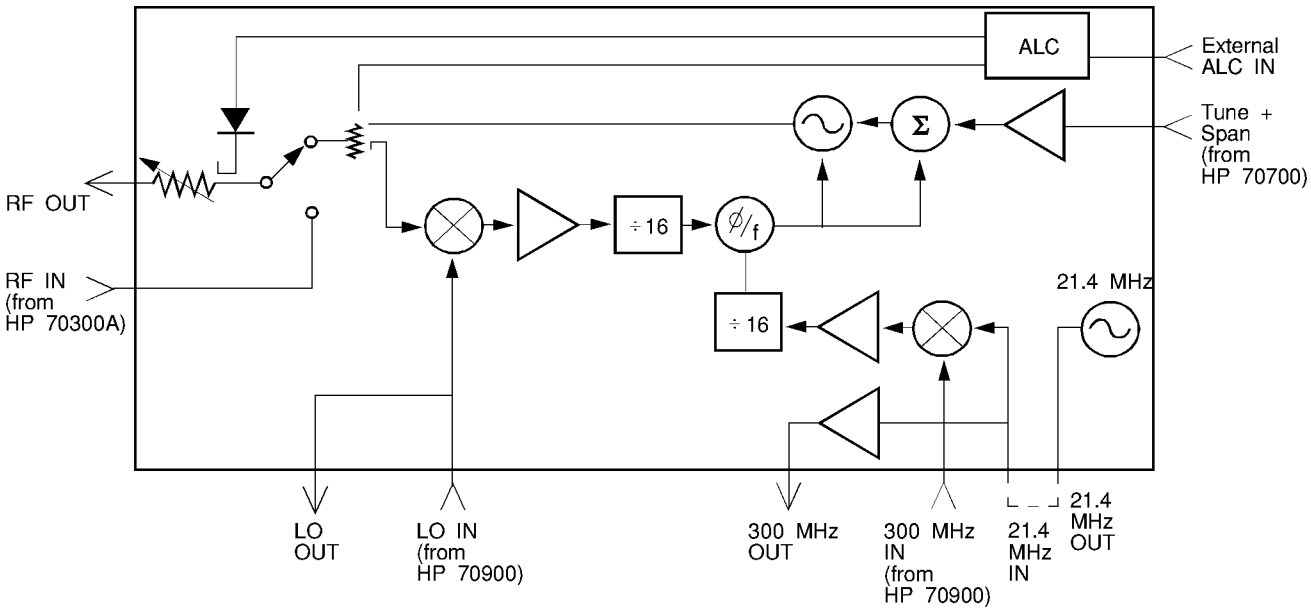

Figure A-18. HP 70301A Microwave Tracking Generator Block Diagram

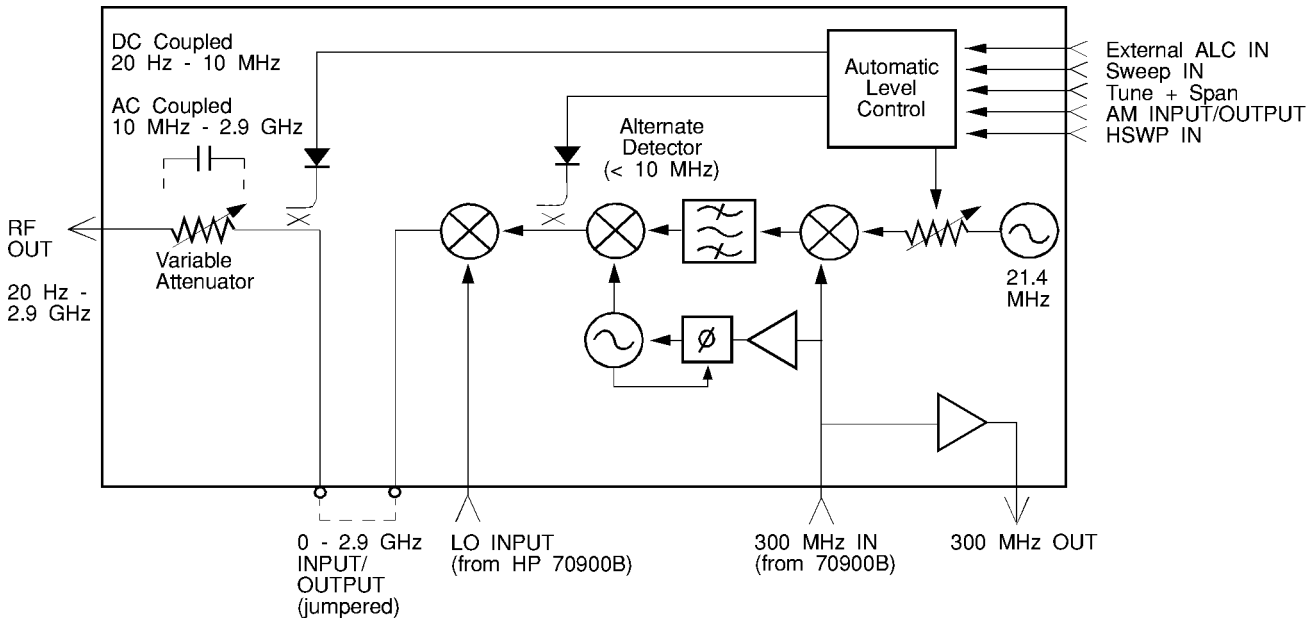

Figure A-19. HP 70300A RF Tracking Generator Block Diagram

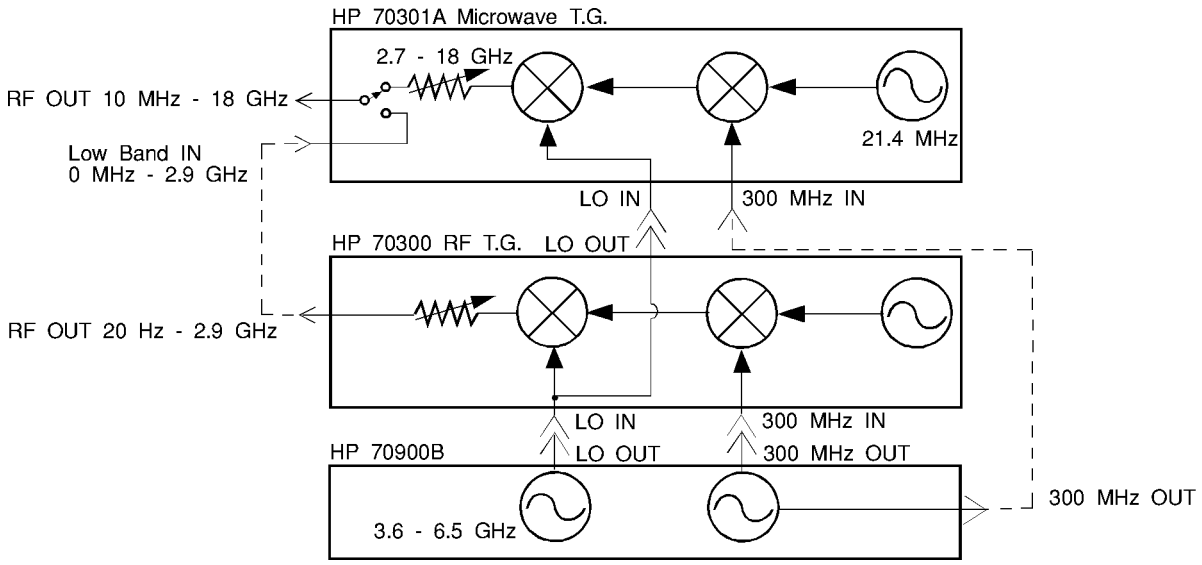

Figure A-20.
HP 70000 RF and Microwave Source with an HP 70900B Local Oscillator Source Configuration Block Diagram

B

Inputs and Outputs on Modular Spectrum Analyzer Modules

The following text describes the inputs and outputs on modular spectrum analyzer modules. For installation information, refer to the *HP 70000 Modular Spectrum Analyzer Installation and Verification Manual.*

HP 70300A RF Tracking Generator and HP 70301A Microwave Tracking Generator

The HP 70300A RF tracking generator measures the frequency response of devices from 20 Hz to 2.9 GHz with more than 120 dB of dynamic range. The power level of the source output can be varied from −10 to −20 dBm. Up to 70 dB of attenuation in 10 dB increments is available with a tracking-generator option. The source output can be modulated with an internal or external signal. The HP 70301A microwave tracking generator measures the frequency response of devices from 2.7 GHz to 18 GHz. The HP 70301A microwave tracking generator provides a 55 dB attenuator and vernier control that attenuate the RF OUTPUT from 0 to 60 dB.

When used together, the HP 70300A RF tracking generator and HP 70301A microwave tracking generator can provide, at one output port, frequency coverage from 10 MHz to 18 GHz. Frequency-span inaccuracies are possible during tracking-generator measurements when an external-mixer-interface module and a tracking generator are contained in the same mainframe. For this reason, this configuration is not recommended for tracking-generator measurements.

Front-Panel Ports

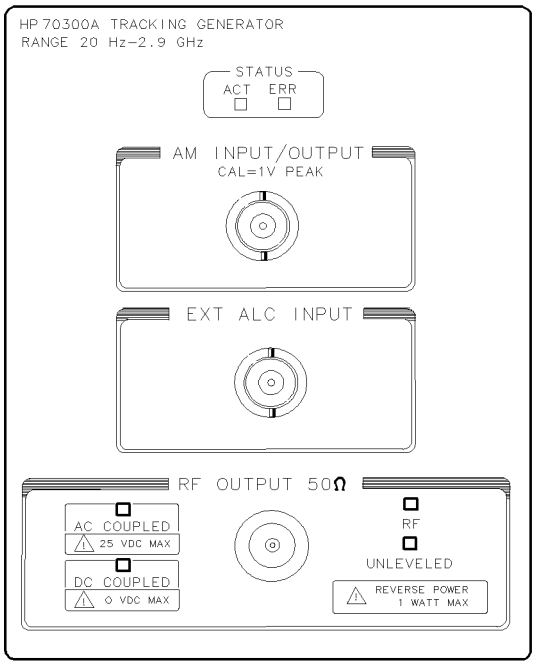

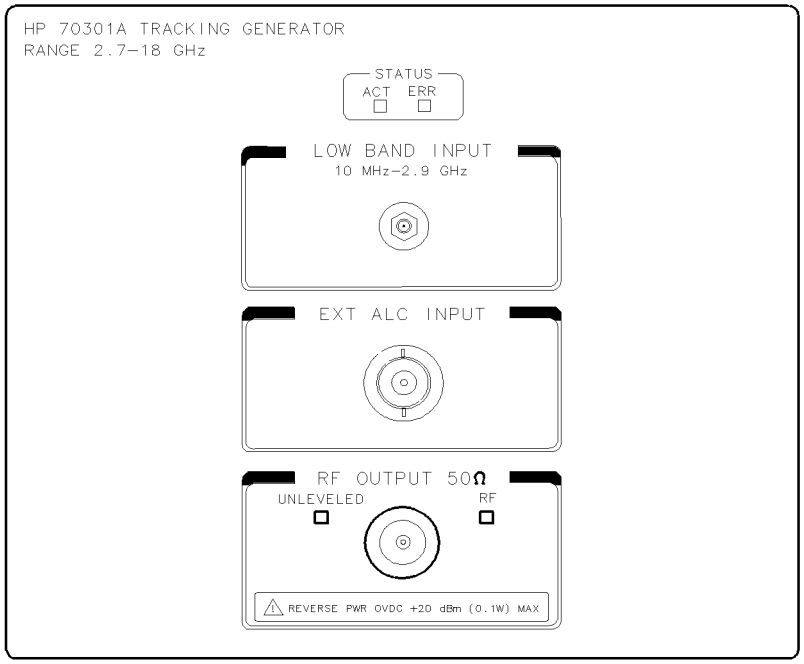

BUA1

Figure B-1.
HP 70300A RF Tracking Generator and HP 70301A Microwave Tracking Generators, Front View

AM INPUT	receives an external signal source for amplitude modulating the source RF OUTPUT. EXT ALC INPUT receives a control level from an external detector for input to the tracking-generator, automatic-level-control circuit.
RF OUTPUT	is the tracking-generator output, which tracks the frequency of swept responses displayed on the spectrum analyzer screen. The `track gen` keys control the RF OUTPUT signal.
LOW BAND INPUT	(on the HP 70301A microwave tracking generator only) receives the RF OUTPUT from the HP 70300A RF tracking generator.

Rear-Panel Ports

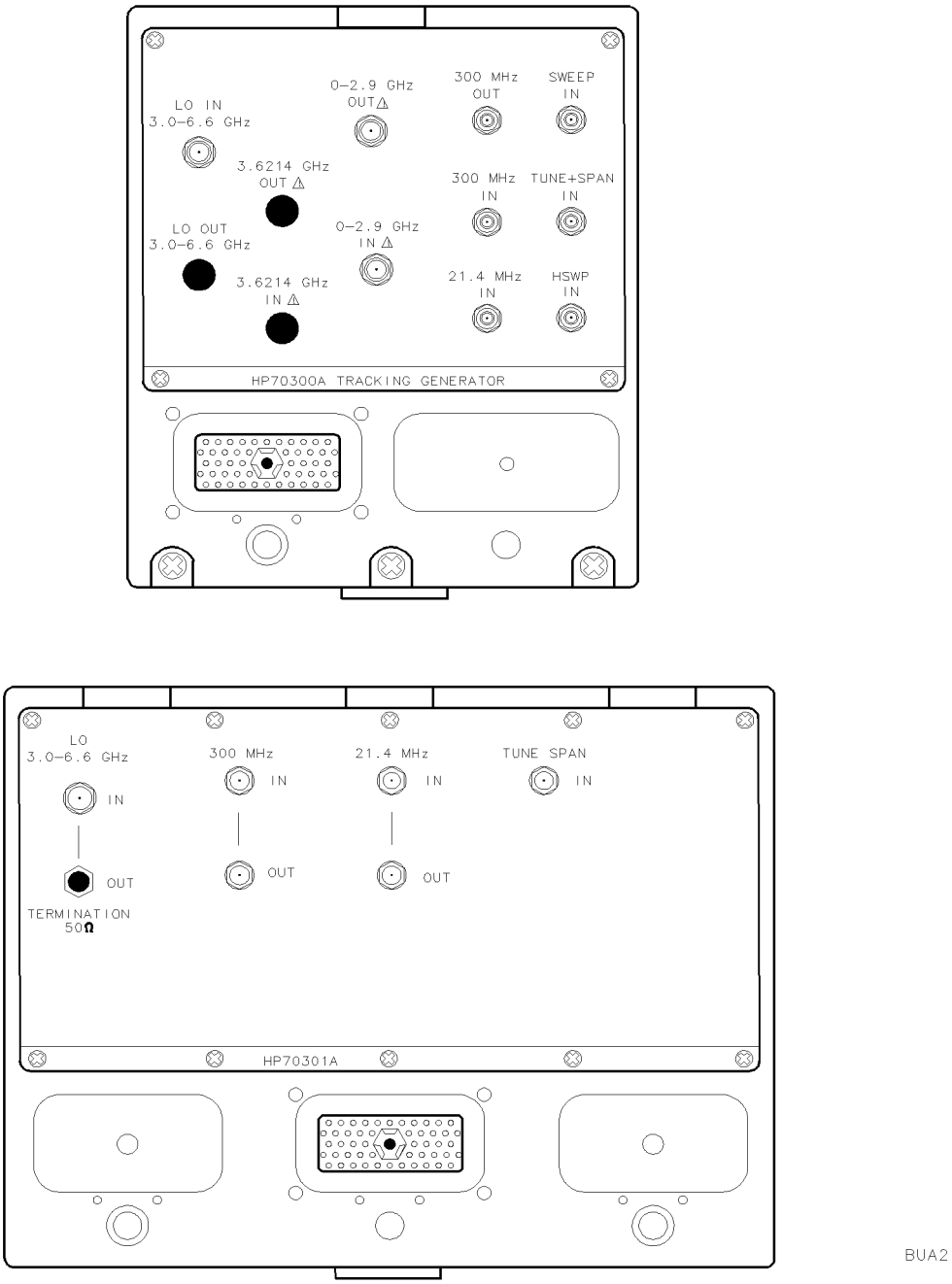

Figure B-2.
HP 70300A RF Tracking Generator and HP 70301A Microwave Tracking Generators, Rear View

3.6214 GHz IN and OUT	are normally connected. They may be disconnected to offset the tracking-generator output up to 30 MHz (nominal) by applying a signal between 3.5914 to 3.6514 GHz. Note that breaking the connection between the 3.6214 GHz INPUT and OUTPUT yields unleveled amplitude levels at the RF OUTPUT unless the output level is sensed with an external negative detector. Route the sensed output level to EXTERNAL ALC IN.
21.4 MHz IN/OUT	receives an external 21.4 MHz signal for mixing with the local oscillator signal. A signal between 11.4 and 31.4 MHz may be applied to offset the tracking-generator output.
0–2.9 GHz IN/OUT	are normally connected. They may be disconnected to access the tracking generator output at the rear panel, but note the 0–2.9 GHz OUTPUT is *not leveled* according to specifications. Signals beyond 10 MHz are unleveled. Signals between 20 Hz and 10 MHz are leveled, but *not* according to specifications because the disconnection does not permit compensation for the step attenuator. If desired, the 0–2.9 GHz output may be sensed with a negative diode. Return the sensed level to the EXT ALC INPUT.
SWEEP + TUNE	receives the tuning-voltage from the HP 70900B local oscillator source. The tuning voltage is applied to the automatic-level-control circuitry in the tracking generator.
SWEEP IN	receives the 0–10 V ramp which is applied to the automatic-level-control circuitry in the tracking generator.
300 MHz IN	receives the 300 MHz signal from the HP 70900B local oscillator source for phase-locking the tracking generator with the spectrum analyzer.
300 MHz OUT	is the 300 MHz IN signal, leveled to a constant amplitude.
LO IN	mixes with the tracking-generator internal oscillator to produce the RF OUTPUT (source) signal.
LO OUT	(first local oscillator output) provides 3.0 to 6.6 GHz, depending on the spectrum analyzer measurement range or the settings of the `LO OSC START` and `LO OSC STOP` keys. The signal is generated by the HP 70900B local oscillator source.
HSWP IN	is a 0 to +5 V square wave that is high during the sweep and low between sweeps. To disable the sweep, the port may be held low.

HP 70310A Precision Frequency Reference

The HP 70310A precision frequency reference provides a frequency reference for HP 70000 modular measurement instruments and other instruments. The module provides two references, 10 MHz and 100 MHz, which are produced by a phase-locked, ovenized oscillator.

An external reference input is available for applying a house standard to your spectrum analyzer. An option adds two isolated distribution amplifiers with three outputs each leveled to 0 dBm. Each amplifier input accepts a –4 to 4 dBm signal from 5 MHz to 300 MHz. Use the distribution amplifiers to distribute the phase-locking, 300 MHz frequency reference (normally produced by the local oscillator module) to multiple RF sections, tracking generators, or external-mixer-interface modules.

An accessory power pack is available for maintaining the operation of the ovenized oscillator when power is removed from the HP 70001A mainframe.

Rear-Panel Ports

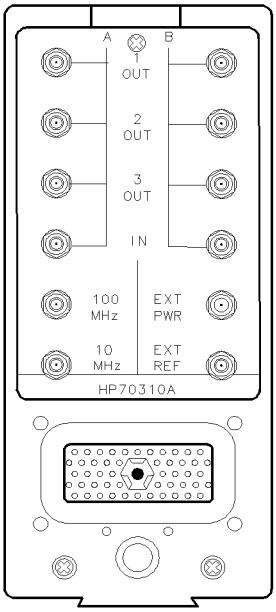

Figure B-3. HP 70310A Precision Frequency Reference, Rear View

EXT REF	(external reference) accepts 1, 2, 5, or 10 MHz from −5 to 21 dBm.
100 MHz	supplies a 100 MHz reference.
10 MHz	supplies a 10 MHz reference.
EXT PWR	accepts power from the External Power Pack, which maintains the operation of the ovenized oscillator when line power is turned off.
AMP IN and OUT	AMP IN receives from 5 to 300 MHz. The output is leveled to 0 dBm for input levels between −4 and 4 dBm. (Signal inputs that are less than −4 dBm are amplified.) AMP IN A and AMP IN B are inputs for two different channels. Each input may be distributed to three different outputs (OUT 1, OUT 2, or OUT 3). One signal may be distributed to five different outputs if the output of one channel is routed to the input of the other channel.

HP 70600A preselector

The HP 70600A preselector module provides tracking preselection from 2.7 to 22 GHz and also provides low-pass filtering below 2.9 GHz. Preselection eliminates confusing multiple responses that are products of multi-band spectrum analyzers. The preselection can be bypassed using the front panel controls to improve sensitivity by 8 to 15 dB, depending on the active frequency band. Up to 70 dB of attenuation is available.

Front-Panel Ports

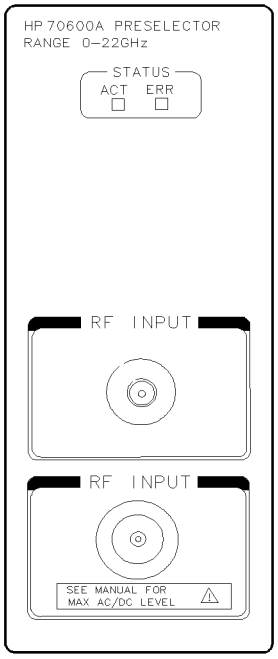

Figure B-4. HP 70600A Preselector, Front View

RF INPUT	receives the spectrum you wish to measure.
RF OUTPUT	passes the preselected or non-preselected spectrum to the RF section.

Rear-Panel Ports

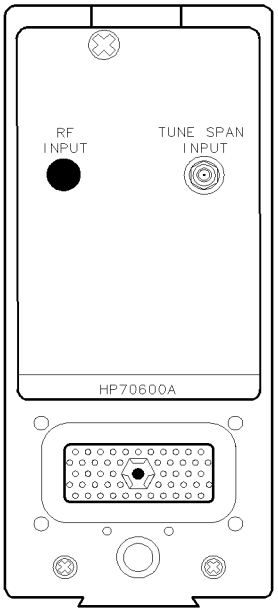

Figure B-5. HP 70600A Preselector, Rear View

TUNE SPAN INPUT — receives the filter frequency-tuning voltage generated by the HP 70900B local oscillator source.

HP 70620A Preamplifier/HP 70620B Preamplifier/HP 70621A Preamplifier

The HP 70620A preamplifier, HP 70620B preamplifier, and HP 70621A preamplifiers are low-noise, high-gain amplification stages to use in front of the RF section of any HP 70000 Series modular spectrum analyzer system. Refer to Table B-1 for information about preamplifier frequency ranges.

Table B-1. Preamplifiers and Their Frequency Ranges

Preamplifier	Frequency Range
HP 70620A preamplifier	2 GHz to 22 GHz
HP 70620B preamplifier	1 GHz to 26.5 GHz
HP 70620B Option 001 preamplifier	100 kHz to 26.5 Ghz
HP 70621A preamplifier	100 kHz to 2.9 GHz

Preamplifiers have two modes: preamplifier and bypass.

The preamplifiers state following a power-up sequence is bypass when used with the HP 70000 Series modular spectrum analyzer systems.

To compensate for preamplifier gain, when the module is switched from bypass to preamplifier mode, the spectrum analyzer's attenuation may be automatically increased and the reference level adjusted. This ensures a safe level at the mixer input.

The preamplifier's default mode is preamplifier (on). (It may be different depending on the firmware of the system master used in the system the preamplifier is installed in.) If an HP 70900B local oscillator source is used as a system master, when the system is powered up the preamplifier is switched to bypass mode.

The preamplifier's gain and flatness are transfered to the spectrum analyzer when the preamplifier is turned on.

Front- and Rear-Panel Ports

RF INPUT — receives the signal whose spectrum you wish to measure.

RF OUTPUT — passes the preamplified or bypassed signal to the next module selected spectrum to the RF section.

28 VDC OUT — (HP 70620B preamplifier and HP 70621A preamplifier only) provides a programmable noise source drive used to make noise-figure measurements.

The preamplifiers have no rear panel ports

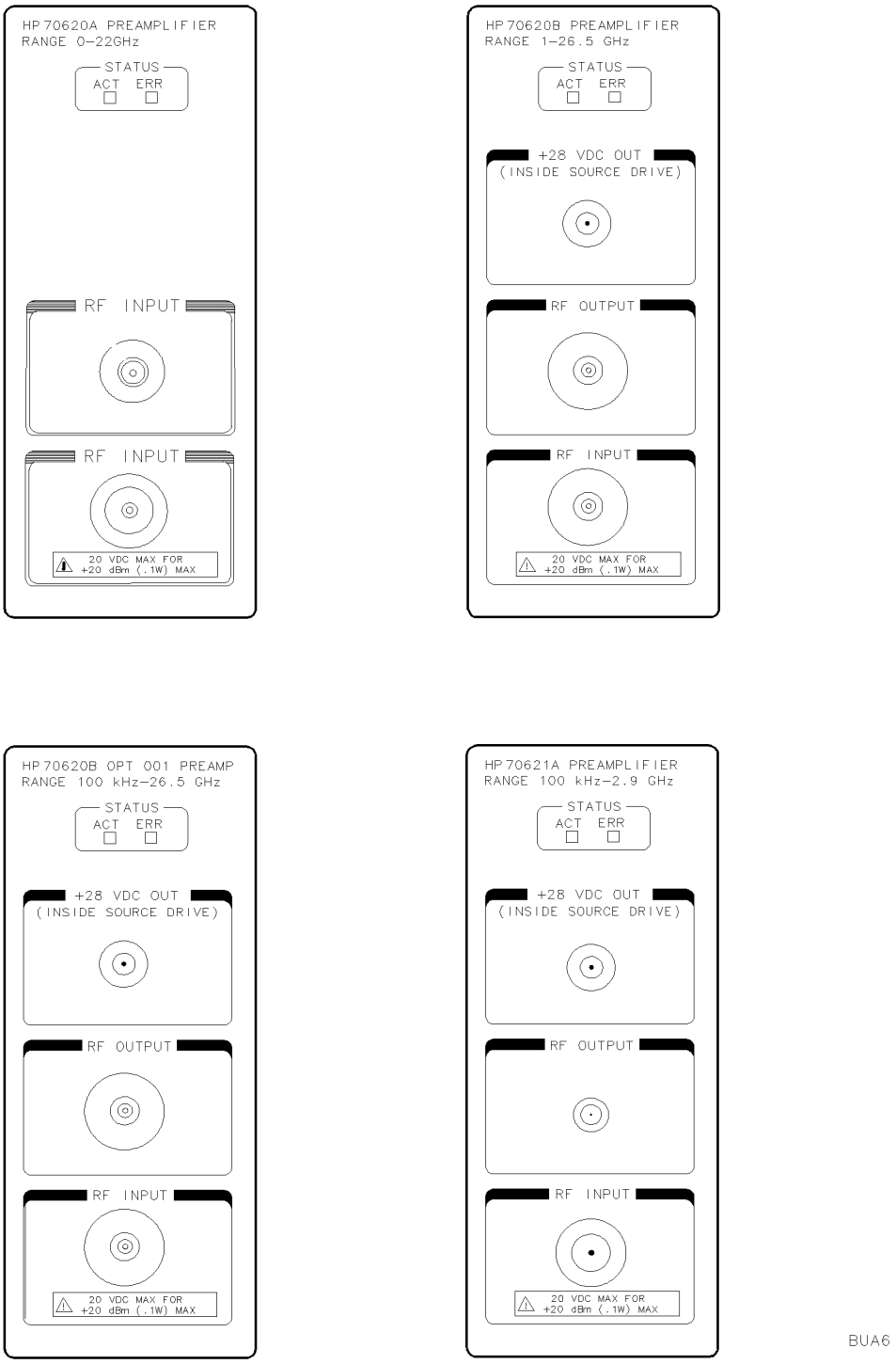

Figure B-6. HP 70620A/B Preamplifier and HP 70621A Preamplifier Front View

HP 70810B Lightwave Section and HP 70810B Option 850 Lightwave Section

WARNING **To avoid the possibility of damage to your eyes, verify a disabled output at the light source before any cleaning, connecting, or disconnecting of optical system components.**

The HP 70810B lightwave section is a 1/8-width module. The lightwave section provides a wavelength measurement range of 1200 nm to 1600 nm (750 nm to 870 nm for an Option 850) and a detected modulation bandwidth of 100 kHz to 22 GHz with an input noise equivalent power of −64 dBm/$\sqrt{\text{Hz}}$. Lightwave section features include HP-IB and HP-MSIB communication capability and both optical and electrical input connectors. The module can operate as either a standard slave module or as an independent module (stand-alone operation).

Typically, the HP 70810B lightwave section precedes the RF section in a modular electrical spectrum analyzer, such as an HP 71210C microwave spectrum analyzer or an HP 71100C modular spectrum analyzer. An electrical spectrum analyzer configured with an HP 70810B lightwave section is a lightwave signal analyzer. The lightwave system detects and displays intensity modulation present on a lightwave signal transmitted on single-mode optical fiber.

The displayed intensity-modulation incorporates frequency-response calibration corrections that compensate for photodetector responsivity and preamplifier gain variations. The factory determines responsivity values for 1300 nm and 1550 nm wavelengths (850 nm for an Option 850). The user can select one of these values or calibrate the lightwave section to some other reference.

Basically the HP 70810B lightwave section consists of optical attenuator, broadband photodetector, microwave preamplifier, and optical power meter. The filter-wheel attenuator provides up to 30 dB of optical attenuation programmed in 1 dB steps. A lens focuses the light onto a high-speed PIN photodetector, which detects the modulation and converts optical power to electrical current (photons to electrons). One path for the detected current drives the high-gain, low noise, four-stage preamplifier, which consists of four traveling-wave GaAs MMICs (Gallium-Arsenide Microwave-Monolithic Integrated Circuit). The preamplifier typically provides 32 dB gain and an 8 dB noise figure from 100 kHz to 22 GHz. A second path monitors the detected current's dc component with a transimpedance circuit, which determines a value representing average optical power. (The average power value appears on a lightwave signal analyzer display as both a real-time vertical power bar and a digital power readout.)

A softkey function connects the RF input to the RF output, thus bypassing all optical hardware to allow conventional electrical spectrum analyzer operation without removing the HP 70810B lightwave section from the modular measurement system.

In a stand-alone configuration, the HP 70810B lightwave section electrical output is the amplified, uncorrected, detected intensity modulation. The function of the power meter is unchanged when the lightwave section is configured for stand-alone operation.

An important feature of the HP 70810B lightwave section is its versatile input connector system. The following are an example of the screw-on optical interface connectors that are available:

Diamond HMS-10/HP
PC/FC
DIN 47256
Biconic
ST

Patch cords that accommodate other optical connector systems, such as the Radiall and D4, are also available. Refer to a Hewlett-Packard catalog for a complete listing of all optical connectors and cables, related part numbers and ordering information.

Front-Panel and Rear-Panel Ports

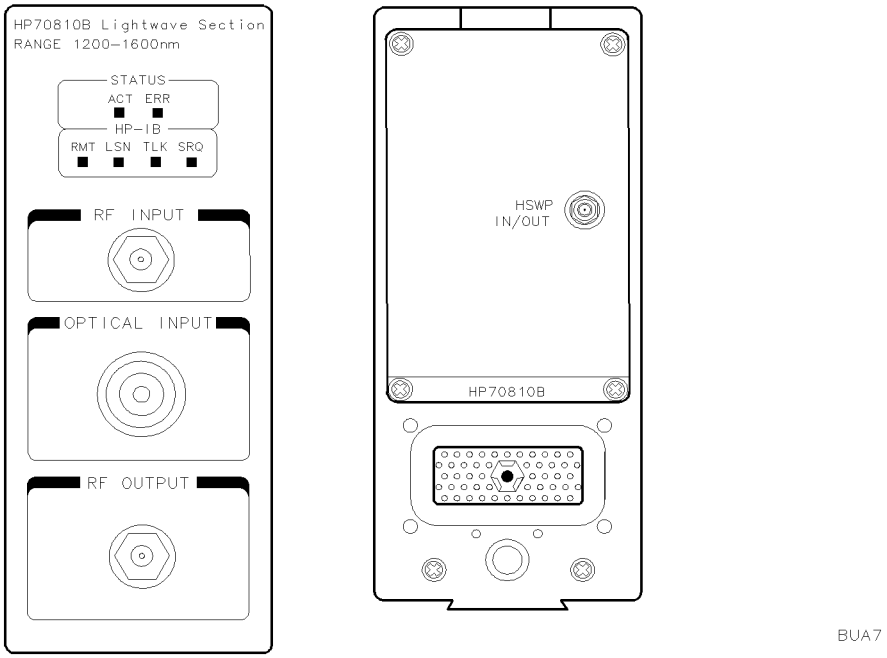

Figure B-7. HP 70810B Lightwave Section Front and Rear View

RF INPUT SMA connector presents a 50Ω nominal input impedance.

RF OUTPUT SMA connector provides a 50Ω nominal output impedance.

HSWP IN/OUT provides a TTL signal that is high while the local oscillator is swept through a selected frequency span. The signal serves to synchronize the lightwave section with the HP 70900B local oscillator source (master module). Mainframe/Module Interconnect is a 50-pin connector that accesses the communication buses (HP-IB and HP-MSIB) and provides mainframe 40 kHz power for the module's power supply.

CAUTION Exposed fiber-optic tips are easily scratched. Do not allow any object to touch an unprotected tip. This precaution is particularly important when installing a connector interface and when making and breaking connections. Refer to Appendix C, "Fiber-Optic Connections" for more information about fiber-optic connector care.

OPTICAL INPUT connector can be one of several types listed as options in the *HP 70810A Lightwave Section User's Guide*.

The HP 70810B lightwave section options include various optical input connector interfaces. Also available are patch cords that accommodate additional optical connector systems. The connectors and patch cords screw on finger-tight to the lightwave section front panel optical input fitting. An optical cable from the light source attaches to the connector interface or patch cord.

Both the front panel fitting and the source cable have a protruding fiber-optic tip. In the center of the tip is the actual single-mode glass fiber. Lightwave measurements demand precision mating of flawless fiber ends. Thus the delicate glass fiber requires protection from mechanical damage, fingerprints, and obstructions.

HP 70900B Local Oscillator Source

The HP 70900B local oscillator source has five primary functions:

1. The module contains the voltage-tuned local oscillator.
2. It produces a phase-locking signal and two voltage ramps. The first ramp, called SWEEP, is from 0 to 10 V and determines where the spectrum analyzer is measuring in the frequency band. The second ramp, called TUNE + SPAN, has a variable slope and dc level and controls the tuning of the (1) local oscillator in the HP 70900B local oscillator source, (2) external-mixer-interface module, (3) tracking-generator module, or (4) preselector module, if any are in the system. The phase-locking signal is a 300 MHz signal that phase-locks to circuitry in the RF-section module, tracking-generator module, or external mixer, if these are in the system. (See "Theory of Operation" and block diagram in Appendix A.)
3. The module converts measurement results into digital values and stores them.
4. The module provides logic and memory for manipulating measurement results and custom measurement routines.
5. The module contains firmware which determines the kinds of spectrum analyzer functions accessed with the (MENU) key.

Front-Panel Ports

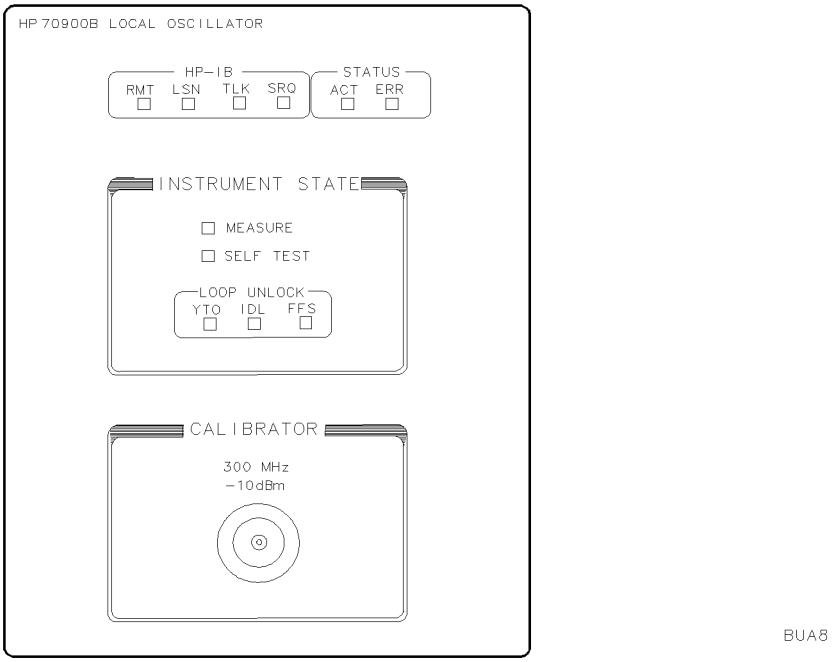

Figure B-8. HP 70900B Local Oscillator Source, Front View

CALIBRATOR supplies a 300 MHz calibration signal at −10 dBm.

Rear-Panel Ports

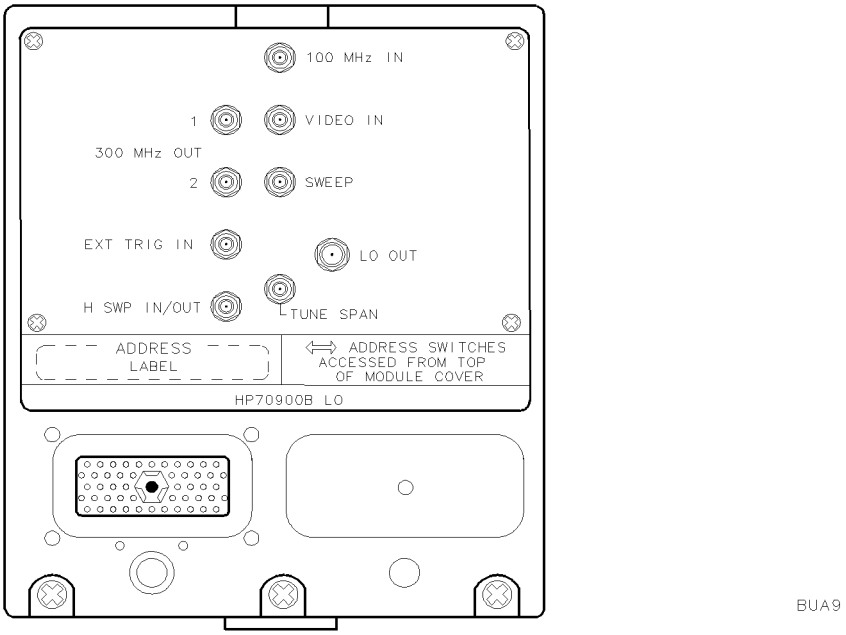

Figure B-9. HP 70900B local oscillator source, Rear View

100 MHz IN	receives a 100 MHz external frequency reference to improve the stability of the spectrum analyzer over time and temperature changes, and calibrate the spectrum analyzer tuning with an external reference. The output of the HP 70310A precision frequency reference Precision Frequency Reference may be connected to the 100 MHz port. You may connect other frequency references.
SWEEP	supplies the 0–10 volt sweep ramp.
TUNE + SPAN OUT	is a voltage ramp with varying slope and dc level. The ramp normally is used to control the tuning frequency of the HP 70900B local oscillator source, tracking-generator output, preselector filter, and external mixer interface oscillator. HSWP IN/OUT is a 0 to +5 V square wave that is high during the sweep and low between sweeps and between bands in multi-band sweeps. To disable the sweep, the port may be held low. EXT TRIG (external trigger) receives an external signal that can determine when the spectrum analyzer sweep begins.
300 MHz OUT	supplies a phase-locking signal. Route the 300 MHz signal to other RF sections, the tracking-generator module, or external mixer interface module.
VIDEO IN	receives the video signal from the IF module.
LO OUT	supplies 3.0 to 6.6 GHz depending on the measurement range and the settings of the `LO OSC START` and `LO OSC STOP` keys.
HSWP IN/OUT	has a TTL signal that is high any time the LO is sweeping. This port works both as an output and input, allowing other modules in the system to interrupt the sweep.

HP 70902A IF Section (Resolution Bandwidth 10 Hz–300 kHz)

The HP 70902A IF section provides resolution bandwidth settings from 10 Hz to 300 kHz that can be varied in a 1, 3, 10 sequence, or by 10% increments for resolution bandwidths less than 3 kHz or greater than 10 kHz.

The HP 70902A IF section module contains circuitry for bandwidth filtering, video detection, post-detection video filtering, and amplification.

Front-Panel Ports

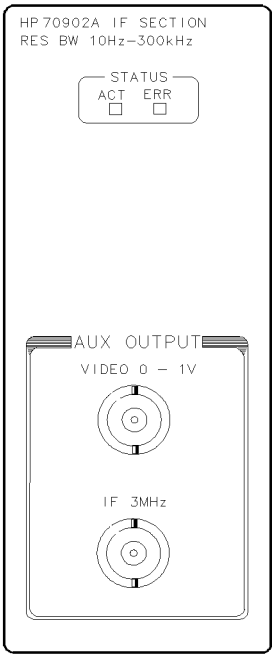

Figure B-10. HP 70902A IF Section, Front View

VIDEO 0–1V output is the video signal with an approximate bandwidth of 3 MHz and amplitude range from 0 to 1 volts. IF 3 MHz is the 3 MHz IF signal. The amplitude changes with the reference-level setting when the vertical scale is linear.

Rear-Panel Ports

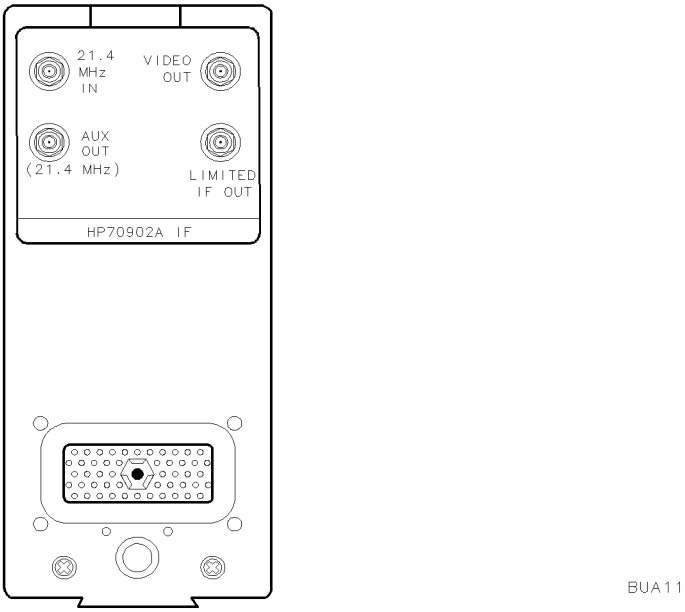

Figure B-11. HP 70902A IF Section, Rear View

VIDEO OUT	is the video signal with an approximate bandwidth of 3 MHz and amplitude range from 0 to 2 volts.
LIMITED IF OUT	is for factory testing. 21.4 MHz IN receives the 21.4 MHz IF signal from the RF section, the external mixer interface module, or the HP 70903A IF section if one is in the system.
21.4 MHz AUX	(auxiliary) OUT is the 21.4 MHz IF with a bandwidth of approximately 9 MHz.

HP 70903A IF section (Resolution Bandwidth 100 kHz–3 MHz)

The HP 70903A IF section provides resolution bandwidth settings from 100 kHz to 3 MHz in a 1, 3, 10 sequence or in 10% increments.

The HP 70903A IF section module contains circuitry for bandwidth filtering, video detection, post-detection video filtering, and amplification.

Front-Panel Ports

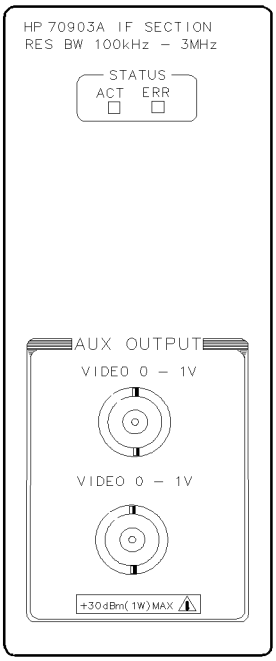

Figure B-12. HP 70903A IF Section, Front View

VIDEO 0-1V — output is the video signal and has an approximate bandwidth of 3 MHz and amplitude range from 0 to 1 volts.

21.4 MHz IF — is the 21.4 MHz IF signal. The amplitude changes with the reference-level setting.

Rear-Panel Ports

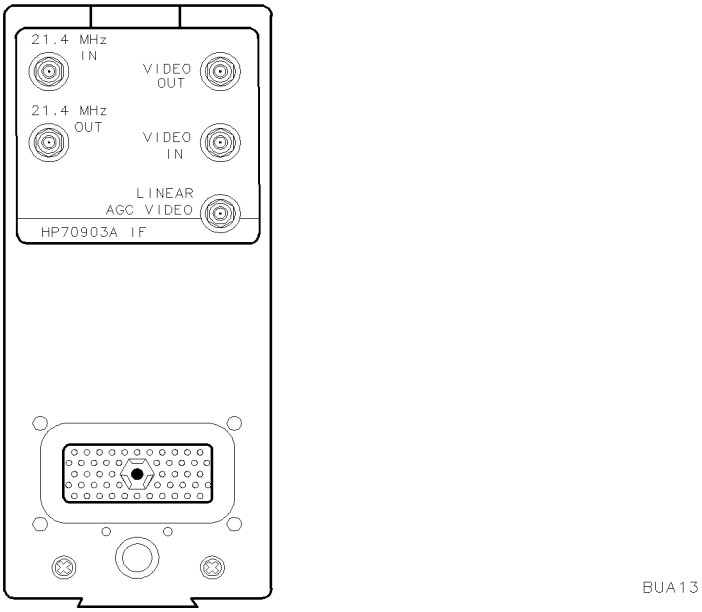

Figure B-13. HP 70903A IF section, Rear View

VIDEO OUT	is the video signal and has an approximate bandwidth of 3 MHz and amplitude range from 0 to 2 volts. LINEAR AGC VIDEO is the video signal whose peak value is leveled to 1 V nominally, and is linearly related to the RF signal. VIDEO IN receives the VIDEO OUT signal from the HP 70902A IF section, if one is in the system. LOGGED IF OUT is for factory testing.
21.4 MHz IN	receives the 21.4 MHz IF signal from the RF section or the external mixer-interface module.
21.4 MHz OUT	is connected to 21.4 MHz IN on the HP 70902A IF section.
LINEAR AGC VIDEO	is a video signal with a peak value that is leveled at 1 volt (nominal). The video signal is linearly related to the RF signal.

HP 70904A RF section (100 Hz to 2.9 GHz)

The HP 70904A RF section converts the RF input signal to 21.4 MHz and provides up to 70 dB of input attenuation in 10 dB increments. Either ac or dc coupling may be selected using the front panel controls.

Front-Panel Ports

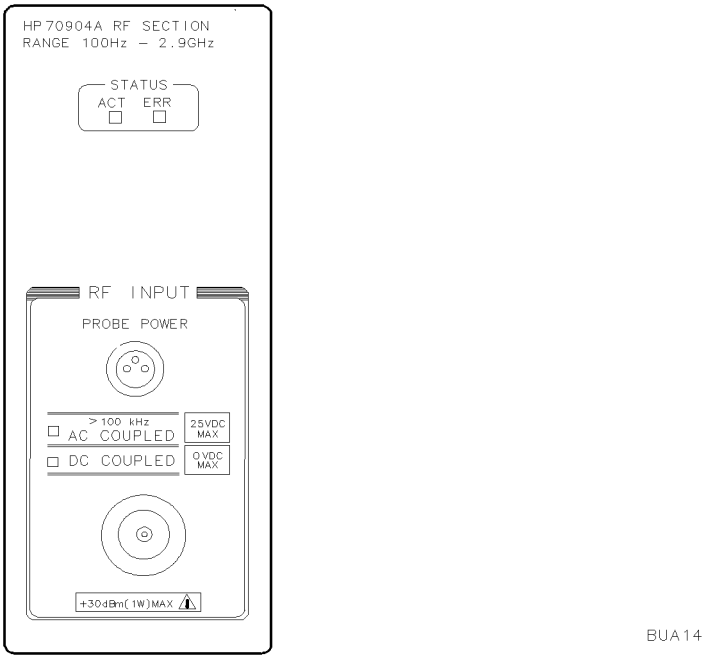

Figure B-14. HP 70904A RF section, Front View

RF INPUT	receives the spectrum you wish to measure.
PROBE POWER	provides dc levels of +15 V, –12 V, and ground at a maximum of 150 mA.

Rear-Panel Ports

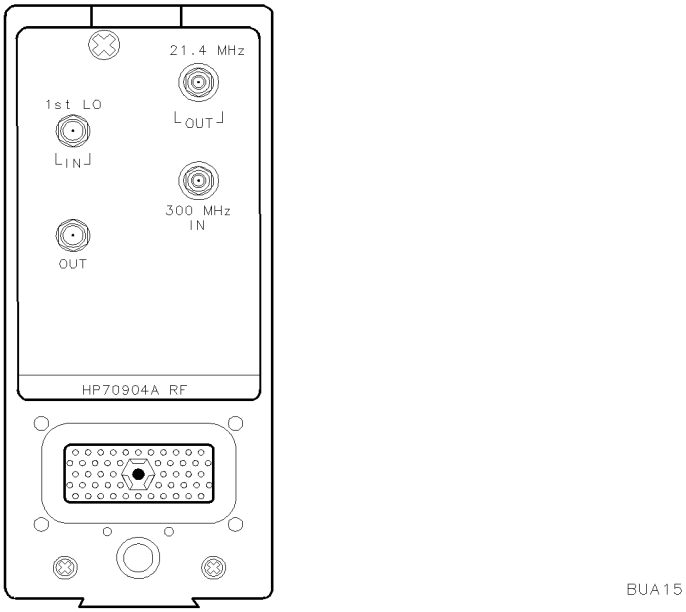

Figure B-15. HP 70904A RF section, Rear View

1st LO IN — receives the 3.0 to 6.6 GHz signal generated by the HP 70900B local oscillator source.

1st LO OUT — (first local oscillator output) provides 3.0 to 6.6 GHz, depending on the spectrum analyzer measurement range or the settings of the `LO OSC START` and `LO OSC STOP` keys. The HP 70900B local oscillator source generates the 3.0 to 6.6 GHz signal. 300 MHz IN receives the 300 MHz signal from the local oscillator for phase-locking.

21.4 MHz OUT — is the 21.4 MHz IF signal for routing to the IF modules for filtering and detection.

HP 70905A RF section AND 70905B RF Section (50 kHz to 22 GHz)

The HP 70905A RF section and HP 70905B RF section convert the RF input signal to 21.4 MHz. The HP 70905A RF section has up to 70 dB of attenuation in 10 dB increments.

Front-Panel Ports

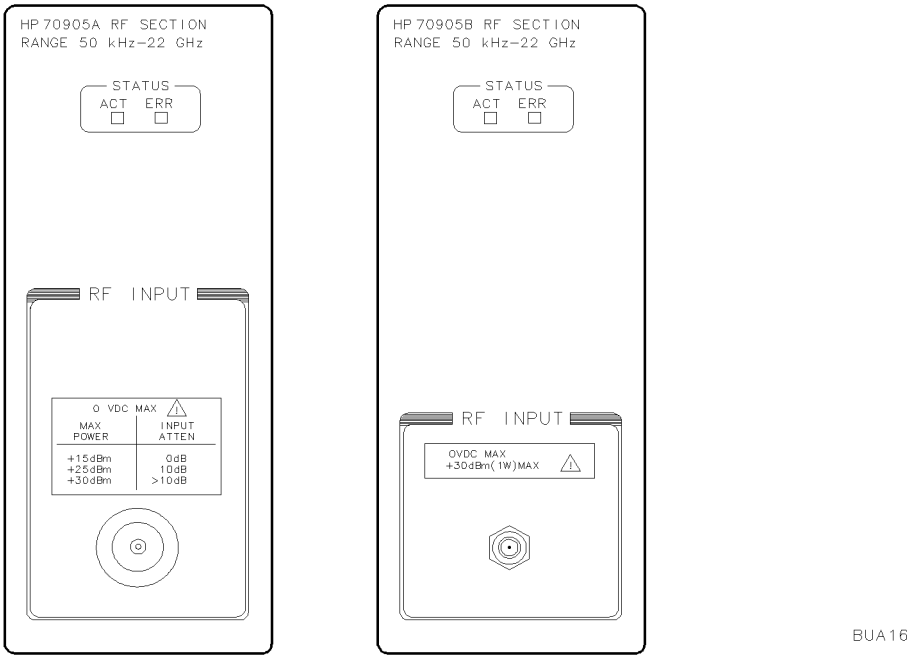

Figure B-16. HP 70905A RF section and HP 70905B RF sections, Front View

RF INPUT is an unpreselected input for the spectrum analyzer. For preselected measurements, the output of the preselector module (for example, HP 70600A preselector) may be connected to the RF INPUT.

Rear-Panel Ports

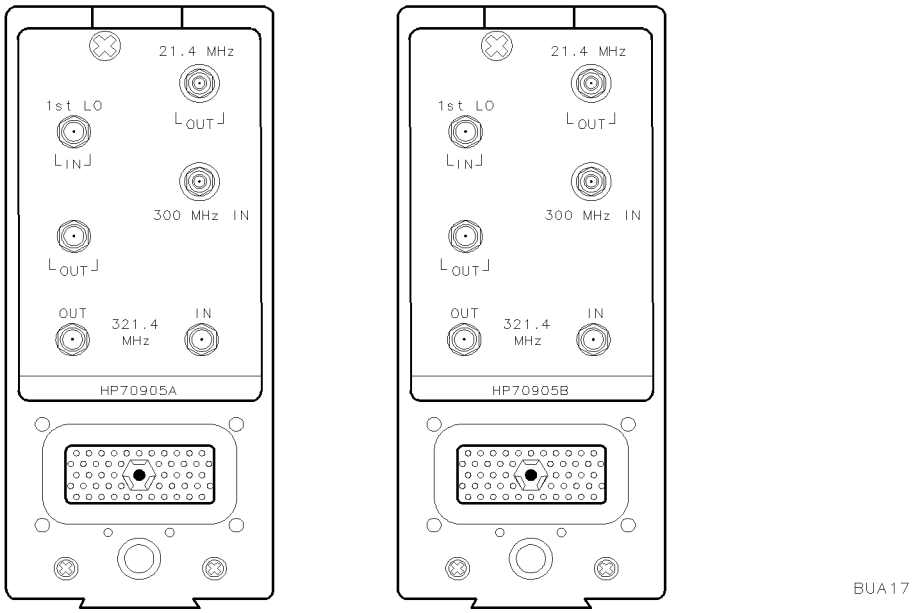

Figure B-17. HP 70905A RF section and HP 70905B RF section, Rear View

321.4 MHz IF OUTPUT	is normally connected to the 321.4 MHz input. The output port may be used for special applications. The port typically has a bandwidth greater than 30 MHz.
1st LO IN	receives the 3.0 to 6.6 GHz signal from the HP 70900B local oscillator source.
1st LO OUT	(first local oscillator output) provides 3.0 to 6.6 GHz, depending on the spectrum analyzer measurement range or the settings of the `LO OSC START` and `LO OSC STOP` keys. The 3.0 to 6.6 GHz signal is generated by the HP 70900B local oscillator source. 300 MHz IN receives the 300 MHz signal from the HP 70900B local oscillator source for phase-locking. 21.4 MHz OUT is the 21.4 MHz IF signal for routing to the IF modules for filtering and detection.
21.4 MHz IN	receives the 21.4 MHz signal from the RF section.

HP 70906A RF Section (50 kHz to 26.5 GHz)

The HP 70906A RF section converts the RF input signal to 21.4 MHz and provides up to 70 dB of input attenuation in 10 dB increments.

Front-Panel Ports

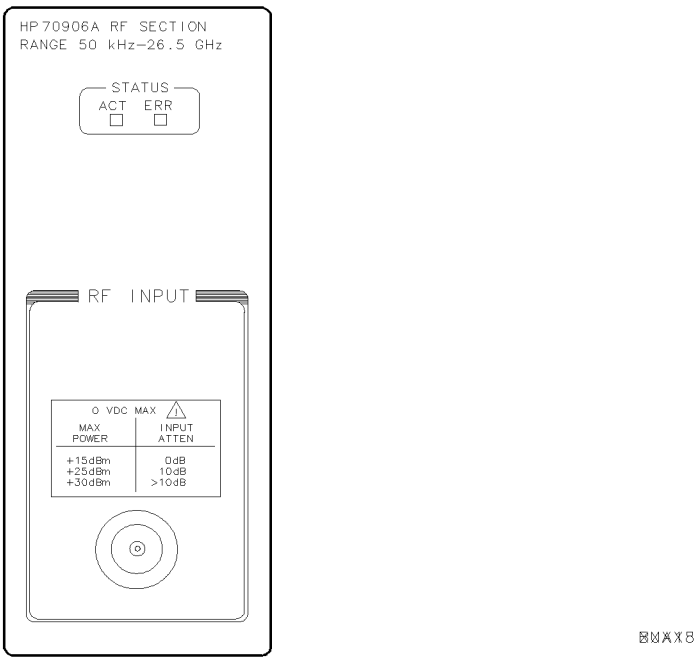

Figure B-18. HP 70906A RF section, Front View

RF INPUT is an unpreselected input for the analyzer. For preselected measurements up to 22 GHz, the output of the preselector module (for example, HP 70600A preselector) may be connected to the RF INPUT.

Rear-Panel Ports

321.4 MHz IF OUTPUT — is normally connected to the 321.4 MHz input. The output port may be used for special applications. The port typically has a bandwidth greater than 30 MHz.

1st LO IN — receives the 3.0 to 6.6 GHz signal from the local oscillator module.

1st LO OUT — (first local oscillator output) provides 3.0 to 6.6 GHz, depending on the spectrum analyzer measurement range or the settings of the `LO OSC START` and `LO OSC STOP` keys. (The HP 70900B local oscillator source generates the 3.0 to 6.6 GHz signal.) 300 MHz IN receives the 300 MHz signal from the local oscillator module for phase-locking.

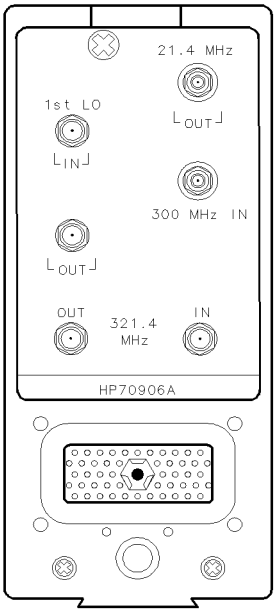

Figure B-19. HP 70906A RF section, Rear View

HP 70907A/B external mixer interface moduleU;

The HP 70907A/B external mixer interface module enables measurements up to 325 GHz using external mixers. The modules contain a local oscillator amplifier, a diode bias supply, and conversion circuitry to convert 321.4 MHz to 21.4 MHz for final routing to an IF module in the modular spectrum analyzer.

An external mixer is required when measuring with the HP 70907A/B external mixer interface module. Both the HP 70907A external mixer interface module and the HP 70907B external mixer interface module allow the HP 70000 Series modular spectrum analyzer system to operate with the HP 11970 Series harmonic mixers.

The HP 70907B external mixer interface module also allows operation with the HP 11974 Series harmonic mixers. At turn on, the system master sets the HP 70907B external mixer interface module default to `PRESEL ON`, resulting in a sweep time that is slow enough for the internal preselector- magnetics in an HP 11974 Series harmonic mixers. If the HP 70907B external mixer interface module is used with an external mixer from the HP 11970 Series harmonic mixers, `PRESEL OFF` can be selected to tell the system master to sweep faster.

Front-Panel Ports

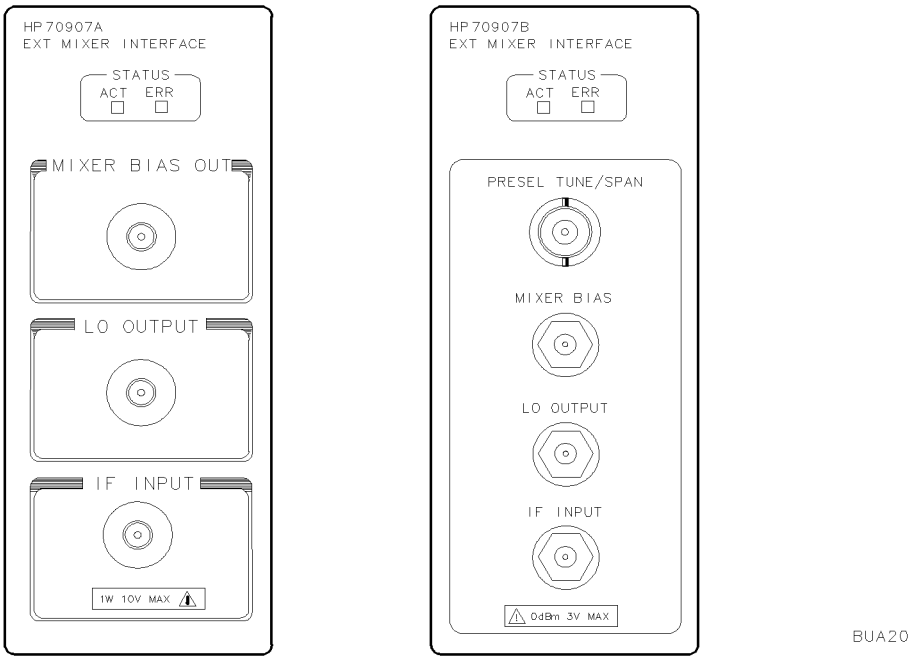

Figure B-20. HP 70907A/B external mixer interface moduleU;, Front View

MIXER BIAS OUT or

MIXER BIAS provides the bias output for an external mixer that requires bias. LO OUTPUT supplies 3.0 to 6.6 GHz, depending on the measurement range or the settings of the `LO OSC START` and `LO OSC STOP` keys, required by the external mixer.

IF INPUT receives the IF signal from the external mixer.

PRESEL TUNE/SPAN	(HP 70907B external mixer interface module only) supplies a dc voltage derived from summing the LO tune span signal with the preselector peak DAC. This is used to drive the preselector in an HP 11974 Series harmonic mixers.

Rear-Panel Ports

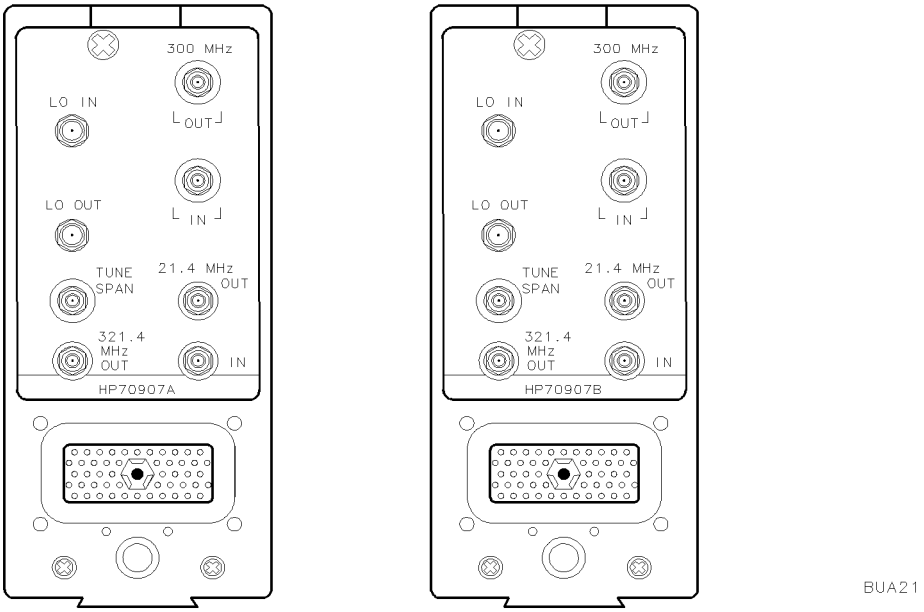

Figure B-21. HP 70907A/B external mixer interface moduleU;, Rear View

TUNE SPAN	receives the tune span signal from the LO. In an HP 70907A external mixer interface module this signal controls the frequency of the voltage-tuned-calibrator-oscillator in the external mixer. In an HP 70907B external mixer interface module, this LO tune span signal is summed with the Preselector Peak DAC to obtain the front panel PRESEL TUNE/SPAN signal. See front panel ports. The frequency variations of the 321.4 MHz calibration source are controlled in another manner in an HP 70907B external mixer interface module.
21.4 MHz OUT	provides the 21.4 MHz IF signal for routing to the IF sections for filtering and detection.
321.4 MHz OUT	provides an auxiliary IF output that tracks the 21.4 MHz OUT.
300 MHz IN	receives the phase-lock signal generated by the HP 70900B local oscillator source.
300 MHz OUT	provides a feed-through path for the local oscillator-generated 300 MHz signal, allowing the configuration of additional RF sections, tracking generators, or EMIMs.
LO IN	receives the 3.0 to 6.6 GHz signal from the HP 70900B local oscillator source.
LO OUT	provides a feed-through path for the local oscillator-generated 3.0 to 6.6 GHz signal, allowing the configuration of additional modules that require an LO IN signal. If not used this output connector should be terminated in 50 Ω.

HP 70908A RF Section

The HP 70908A RF section offers preselected, fundamental mixing from 100 Hz to 22 GHz. The preselector inside the HP 70908A RF section does not require peaking.

Rear-Panel Ports

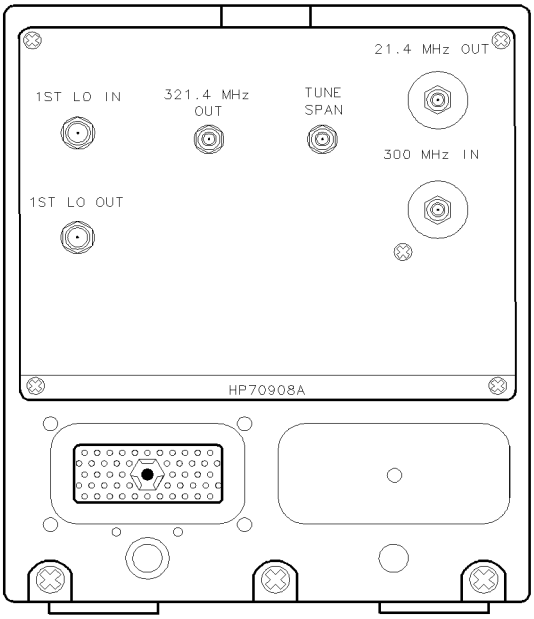

Figure B-22. HP 70908A RF Section

1st LO IN — receives the 3.0 to 6.6 GHz signal generated by the HP 70900B local oscillator source.

1st LO OUT — (first local oscillator output) is the 3.0 to 6.6 GHz signal generated by the HP 70900B local oscillator source. The frequency depends on the spectrum analyzer measurement range or the settings of the `LO OSC START` and `LO OSC STOP` keys.

TUNE SPAN — input is a voltage ramp with varying slope and dc level that is generated by the HP 70900B local oscillator source. The ramp assists in the control of the preselector in the HP 70908A RF section. The ramp also controls the tuning frequency of the tracking generator, external mixer interface, or preselector modules, if they are in the system. 321.4 MHz OUT has a bandwidth of about 30 MHz.

300 MHz IN — receives the 300 MHz signal from the HP 70900B local oscillator source for phase locking.

21.4 MHz OUT — is the 21.4 MHz IF signal, which is routed to the IF section for filtering and detection.

HP 70909A RF Section

The HP 70909A RF section offers preselected, fundamental mixing from 100 Hz to 26.5 GHz. The preselector inside of the HP 70909A RF section does not require peaking.

Front-Panel Ports

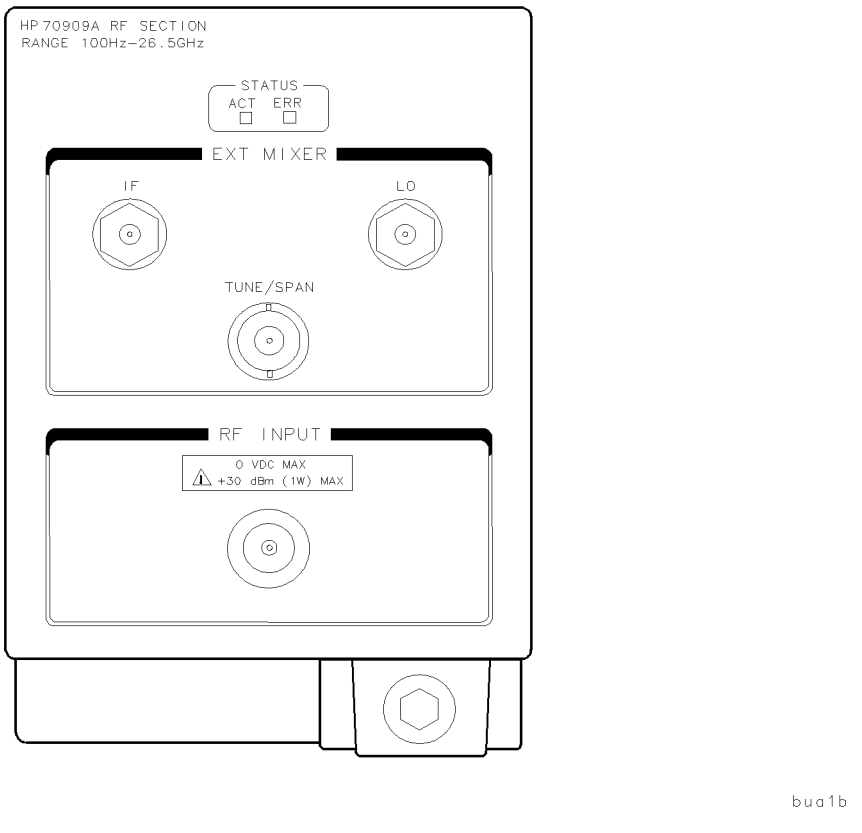

Figure B-23. HP 70909A RF Section Front Panel

EXT MIXER IF	input receives the 321.4 MHz IF signal from the external mixer used to analyze millimeter wave signals. This function is accessed by pressing State select input IN x EM 70909A where x is the number of the input ranging from 2 to 4.
EXT MIXER LO	output provides a leveled 3.0 GHz to 6.6 GHz signal that an attached external mixer uses to heterodyne with the millimeter wave signal of interest to generate the 321.4 MHz IF signal. The frequency depends on the selected spectrum analyzer center frequency, span settings, and the harmonic mixing number.
EXT MIXER TUNE/SPAN	output provides a swept variable slope dc voltage that is intended to drive the preselector in a preselected external mixer such as the HP 11974 Series harmonic mixers. This signal will be related to the center frequency, frequency span, and harmonic mixing numbers selected by the spectrum analyzer.

Rear-Panel Ports

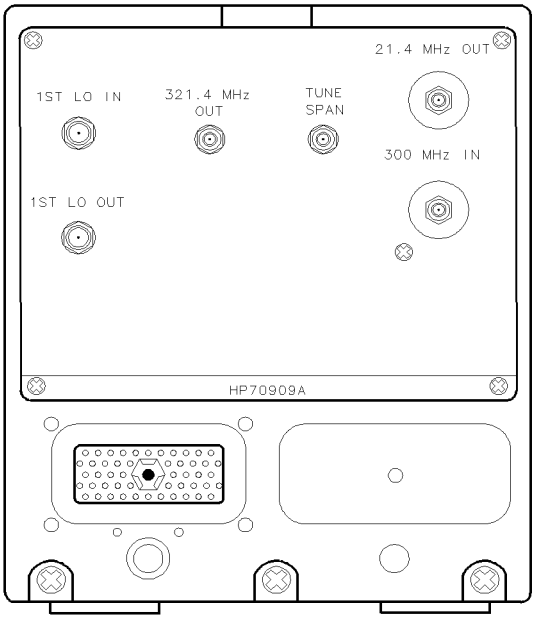

bua2b

Figure B-24. HP 70909A RF Section Rear Panel

1ST LO IN	receives the 3.0 to 6.6 GHz signal generated by the HP 70900B local oscillator source.
1ST LO OUT	(first local oscillator output) is the 3.0 to 6.6 GHz signal generated by the HP 70900B local oscillator source. The frequency depends on the spectrum analyzer measurement range or the settings of the `LO OSC START` and `LO OSC STOP` keys.
TUNE SPAN	input is a voltage ramp with varying slope and dc level that is generated by the HP 70900B local oscillator source. The ramp assists in the control of the preselector in the HP 70909A RF section. The ramp also controls the tuning frequency of the tracking generator, external mixer interface, or preselector modules, if they are in the system.
321.4 MHz OUT	has a bandwidth of about 30 MHz and provides a wide-bandwidth IF output that is approximately 5 dB higher in amplitude than the RF INPUT signal. The intended use for this output is for receiver products that utilize wide-bandwith signal processing.
300 MHz IN	receives the 300 MHz signal from the HP 70900B local oscillator source for phase locking.
21.4 MHz OUT	is the 21.4 MHz IF signal, which is routed to the IF section for filtering and detection.

HP 70910A RF Section

The HP 70910A RF section offers preselected, fundamental mixing from 100 Hz to 22 GHz. The preselector inside of the HP 70910A RF section does not require peaking.

Front-Panel Ports

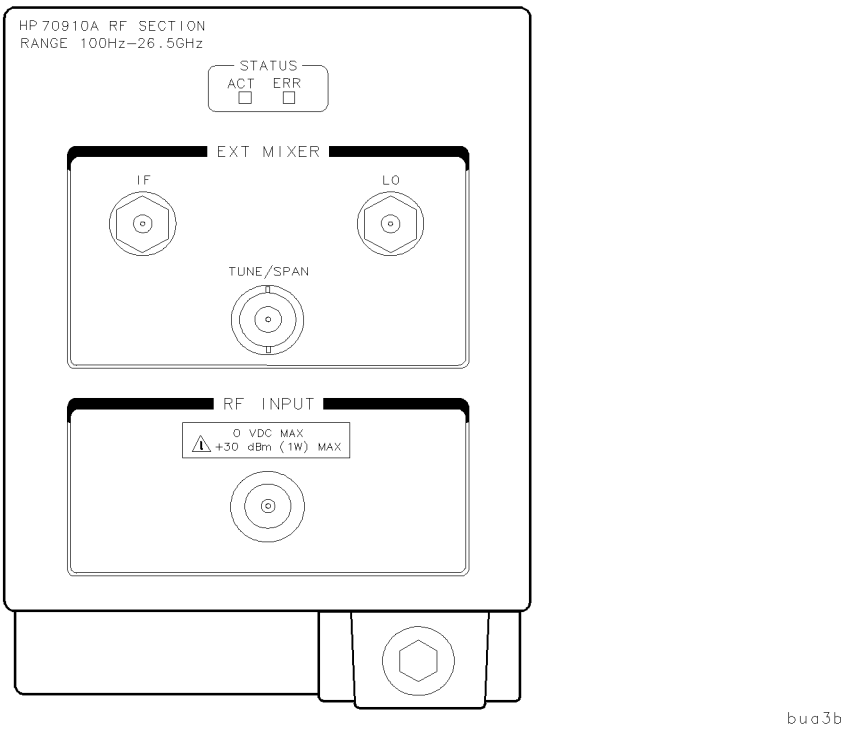

Figure B-25. HP 70910A RF Section Front Panel

EXT MIXER IF — input receives the 321.4 MHz IF signal from the external mixer used to analyze millimeter wave signals. This function is accessed by pressing State select input IN x EM 70909A where x is the number of the input ranging from 2 to 4.

EXT MIXER LO — output provides a leveled 3.0 GHz to 6.6 GHz signal that an attached external mixer uses to heterodyne with the millimeter wave signal of interest to generate the 321.4 MHz IF signal. The frequency depends on the selected spectrum analyzer center frequency, span settings, and the harmonic mixing number.

EXT MIXER TUNE/SPAN — output provides a swept variable slope dc voltage that is intended to drive the preselector in a preselected external mixer such as the HP 11974 Series harmonic mixers. This signal will be related to the center frequency, frequency span, and harmonic mixing numbers selected by the spectrum analyzer.

Rear-Panel Ports

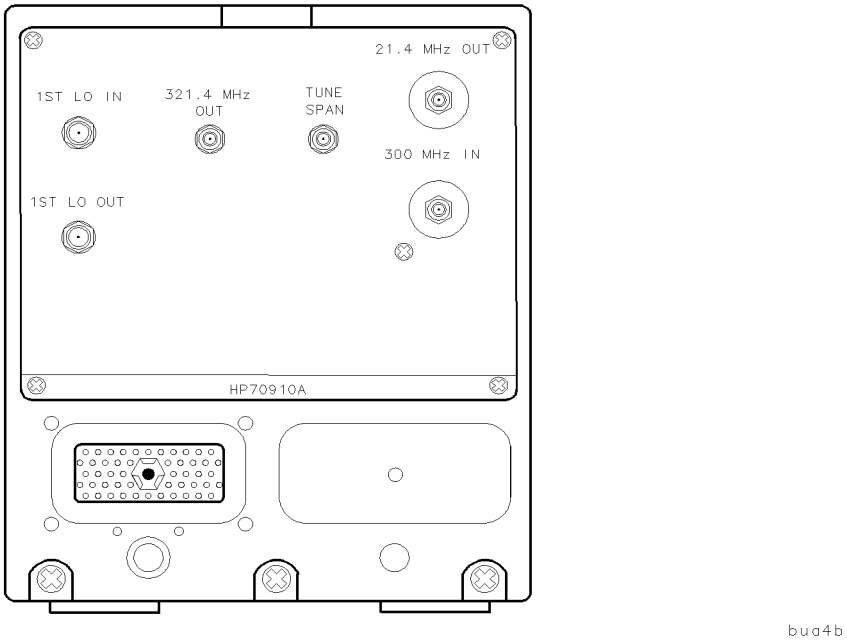

Figure B-26. HP 70910A RF Section Rear Panel

1ST LO IN — receives the 3.0 to 6.6 GHz signal generated by the HP 70900B local oscillator source.

1ST LO OUT — (first local oscillator output) is the 3.0 to 6.6 GHz signal generated by the HP 70900B local oscillator source. The frequency depends on the spectrum analyzer measurement range or the settings of the `LO OSC START` and `LO OSC STOP` keys.

TUNE SPAN — input is a voltage ramp with varying slope and dc level that is generated by the HP 70900B local oscillator source. The ramp assists in the control of the preselector in the HP 70909A RF section. The ramp also controls the tuning frequency of the tracking generator, external mixer interface, or preselector modules, if they are in the system.

321.4 MHz OUT — provides a wide-bandwidth IF output that is approximately 5 dB higher in amplitude than the RF INPUT signal. The intended use for this output is for receiver products that utilize wide-bandwith signal processing.

The HP 70910A RF section's rear panel 321.4 MHz OUT has a bandwidth >50 MHz from 100 Hz to 2.9 GHz (1H– band) and a bandwidth >36 MHz from 2.7 GHz – 26.5 GHz in preselected mode, or >200 MHz in bypassed mode. (1L–, 2L–, 4L+ bands).

300 MHz IN — receives the 300 MHz signal from the HP 70900B local oscillator source for phase locking.

21.4 MHz OUT — is the 21.4 MHz IF signal, which is routed to the IF section for filtering and detection.

C

Fiber-Optic Connections

This section contains information about how to make good fiber-optic connections, how to make dry and wet connections, and how to clean your connectors.

The Importance of a Good Connection

Fiber-optic connectors are used to connect two fiber-optic cable ends together. For example, fiber-optic connectors join cables between optical ports on devices, laser sources, receivers, patch panels, terminals, and many other types of systems or components. Fiber-optic connectors are designed to provide a direct and low-loss optical signal transition from one fiber end to another.

In a fiber-optic system, light is transmitted through an extremely small fiber core. Because fiber cores are often 9 microns (0.009 mm) or less in diameter, and dust particles range from tenths of a micron to several microns in diameter, any contamination on the end of the fiber core can degrade the performance of the fiber-optic connection. Therefore, the connector must be aligned precisely and the connector interface must be free of contamination to make a good connection.

Characterizing a Connection

The quality of a connection can be characterized by connector loss and return loss. Connector (or insertion) loss is one important performance characteristic of a fiber-optic connector. Typical values are less than 1 dB of loss, and sometimes as little as 0.1 dB of loss with high performance connectors. Return loss is another important factor. It is a measure of reflection of the source (the less reflection the better). A good, physically contacting connector can have a return loss of 40 dB, although 20 to 30 dB is more common.

Causes of connector and return loss include:

- Differences in the numerical aperture of the two fibers
- Core misalignment
- Spacing and air gaps
- Damaged, worn, or loose fiber ends
- Contamination on the end face of the connector
- Improper use and removal of index-matching compounds

Numerical aperture differences are not connector related, but the remaining problems are connector related and can be prevented by proper care and maintenance of connectors.

Dry and Wet Connections

Fiber-optic connectors can be used dry or wet. Dry means without index-matching compound; wet means with an index-matching compound. Use dry connectors whenever possible since dry connectors are easier to clean and to keep clean. Dry connectors can be used with physically contacting connectors such as HMS-10/HP, Diamond®, ST, DIN, and PC connectors.

Depending upon the type of connector, physically contacting connectors can typically achieve return loss performance between 30 and 40 dB. If a physically contacting connector has 40 dB return loss or better, making a wet connection will probably not improve (and can degrade) performance. For most measurement applications, the HMS-10/HP connector with a dry connector interface provides a low-loss and low-reflection connection.

Cleaning Dry Connectors

Clean connectors are the key to good connections. Use the HP 15475A Optical Connector Cleaning Kit to help keep your connectors clean. The cleaning kit includes a card with cleaning instructions and recommended cleaning materials for optical connectors. It can be ordered from any HP sales and service office.

In addition to the HP 15475A Optical Connector Cleaning Kit, clean compressed air and lint-free swabs can be used to clean fiber-optic connectors. Clean compressed air is used to dry a connector or to displace particles (dust) from the fiber end. Electronics-grade isopropyl alcohol is an acceptable substitute for connector cleaning solution.

Note If a finger has touched the fiber-optic tip or other contamination is suspected, clean the tip with a new paper and cleaning solution.

Lint-free foam swabs are recommended for cleaning the connectors because they leave no particles. Cotton swabs can be used as long as no cotton fibers remain on the end face after cleaning. Use a clean swab each time you clean a connector and use a clean applicator when applying index-matching compound.

Use the following procedure to clean dry connectors.

1. Clean the connector ferrule with lens cleaning paper and cleaning solution.
2. Apply cleaning solution to a lint-free swab or lens cleaning paper and clean the fiber end. Some amount of wiping or mild scrubbing of the fiber end can help remove particles when application of the cleaning solution alone will not remove them. This can be done by applying the cleaning solution to a swab or lens paper and moving it back and forth across the fiber end several times. This technique can help remove or displace particles smaller than one micron.
3. Allow the connector to dry (about one minute) or dry it immediately with clean compressed air. Compressed air reduces the chance of deposits remaining on the fiber end. Compressed air should be blown horizontally across the fiber end.

Note Do not shake or tip the compressed air can, because this can cause particles in the can to be released with the air.

4. When the connector is dry, use a piece of clean adhesive cleaning tape to remove particles from a dry fiber end. If the cleaning tape is not perfectly clean, it can actually increase the number of particles on the fiber. This type of cleaning tape is included in the HP 15475A Optical Connector Cleaning Kit.

5. Make the optical connection immediately or cover the connector for later use.

Note Use a clean piece of cleaning tape to remove particles from the fiber end immediately before making each connection.

Using Index-Matching Compounds If Necessary

Note It is strongly recommended that index-matching compounds not be applied to HP instruments. If they are required, clean thoroughly after each use or attach an HMS-10/HP adapter cable to the instrument with a dry connection and make wet connections at the free end of the cable. Use of an index-matching compound cannot fix a damaged connector. Do not use gels containing particulates, such as glass spheres, in physically contacting connectors.

In some circumstances, the use of index-matching compound can improve the connection. For example, an index-matching compound can fill the gap and make a smooth transition from fiber to fiber in noncontacting connectors. Noncontacting connectors are connectors with concave or recessed fiber cores; the fiber cores do not make contact at the connecting interface. An index-matching compound can improve the performance of a physically contacting connector that does not have acceptable return loss. In general, if a physically contacting connector interface has a return loss of 30 dB or less in a dry condition, it should be inspected for damage.

Many types of index-matching compounds are available to make wet connections: oil, gel, and grease. Oil is often used on connecting interfaces where little or no air gap is expected. However, oil has a tendency to flow or drip onto unwanted areas and cannot adhere as well to the fiber ends as gel. Gel is more viscous than oil but can be more difficult to remove. Also, some gels contain damaging particulates: read the technical specifications.

If it should become necessary to use the HMS-10/HP connector with a wet interface, Hewlett-Packard currently recommends using an index-matching oil (available as HP part number 8500-4922). Oil or gel can be used on any connector where the cores have recessed or the end faces have been damaged or worn, but this is a temporary solution at best. It risks damaging the mating connector and incurring costly repair in the case of instrument connectors.

Applying Index-Matching Compound

To apply an index-matching compound, use the following procedure:

1. Apply index-matching compound to fiber ends with a clean wooden toothpick, the wooden end of a swab, or a syringe. Use as little index-matching compound as possible; the index-matching compounds should be applied sparingly.
2. Coat the center of the fiber end. Do not apply compound to the sleeve.
3. Use a clean or new applicator with every application.

Follow these suggestions to ensure that as little dust as possible attaches itself to the fiber ends:

- Keep compound oil containers and applicators covered.
- Keep swabs covered.
- Make connections immediately after cleaning and applying compound.

- Keep the work area clean.

Cleaning Wet Connectors

There are many types of solvents for removing index-matching compounds. Contact the compound manufacturer for specific information about recommended solvents and cleaning procedures.

CAUTION Many solvents are toxic. Read the directions for the solvent before using the solvent or when disposing of it. Some solvents can leave residues on connectors or damage components.

Use the following procedure to clean a wet connector.

1. Use a clean lens paper to wipe the compound from the fiber end.
2. Use a clean lens paper to clean the ferrules and other mating surfaces of the connector.
3. Using clean lint-free swabs dipped in cleaning solution and clean compressed air, clean the ferrule and other mating surfaces of the connector. Clean these parts of the connector before cleaning the fiber end.
4. Clean the fiber end with a lint-free swab dipped in cleaning solution. Wipe the swab across it.
5. Let the connector dry. Clean compressed air can be used to speed the drying process.
6. If necessary, repeat the process to ensure that all contamination is removed.
7. As soon as the connector is dry, connect it or cover it for later use.

Making the Connection

Since overtightening or undertightening connectors can result in misalignment and nonrepeatable connections, finger-tighten the connector in a consistent manner and refer to the manufacturer's data sheet for torque recommendations.

When making a connection, you should align the connector so that the fiber end does not touch the outside of the mating connector. (Many connectors have a key slot to help you align and seat the two connectors.) Do not rub the fiber end against any other surfaces (this is especially important if the end face has compound on it). After the ferrule is properly seated inside the connector, use one hand to keep it straight and tighten it with the other hand.

Fiber-Optic Cable and Connector Summary

The performance of a fiber-optic connector varies depending on the following:

- The specific connector used.
- Whether the connector is a physically contacting or a physically noncontacting connector.
- Whether the connection is dry or wet.

Use the following guidelines to achieve the best possible performance when making measurements on your fiber-optic system:

- Ensure the connector interfaces are clean before taking any measurements.
- Use care in handling all fiber-optic connectors.
- Avoid using index-matching compounds if possible.
- If an extremely good match is a concern, characterize the connector interfaces under both dry and wet conditions. The results will show you the level of return loss performance you can expect from the connectors, dry and wet.
- Use the cleaning methods described in this section for dry and for wet connections.
- When physical contact is not made at the fiber interface, use a reliable or recommended index-matching compound to achieve the best possible return loss, the lowest optical reflection and the lowest insertion loss.
- Keep connectors covered when not in use.

D

ASCII Codes, Control Codes, and Escape Characters

Table D-1 lists the American Standard Code for Information Interchange (ASCII), and also lists characters unique to the HP 70004A color display. In the table, codes 0 through 127 are ASCII. Codes 128 through 255 are the HP 70004A color display characters.

Tables D-2 through D-4 list control codes and escape characters that locate the pen, or clear or enhance text.

American Standard Code for Information

Table D-1.
ASCII Characters (codes 0 through 127) and HP 70004A Color Display Characters

Code	Char	Code	Char	Code	Char	Code	Char	Code	Char	Code	Char	Code	Char	Code	Char
0	NU	32		64	@	96	`	128	⁰	160	ÿ	192	↓	224	É
1	SH	33	!	65	A	97	a	129	¹	161	α	193	↑	225	Í
2	SX	34	"	66	B	98	b	130	²	162	β	194	↓	226	Ó
3	EX	35	#	67	C	99	c	131	³	163	γ	195	Δ	227	Ú
4	ET	36	$	68	D	100	d	132	⁴	164	δ	196	∇	228	á
5	EQ	37	%	69	E	101	e	133	₀	165	ε	197	∠	229	é
6	AK	38	&	70	F	102	f	134	₁	166	ζ	198	Ξ	230	í
7	BL	39	'	71	G	103	g	135	₂	167	η	199	Γ	231	ó
8	BS	40	(	72	H	104	h	136	₃	168	θ	200	Γ	232	ú
9	HT	41	)	73	I	105	i	137	₄	169	ι	201	Π	233	À
10	LF	42	*	74	J	106	j	138	ⁱ	170	κ	202	Ψ	234	È
11	VT	43	+	75	K	107	k	139	ʲ	171	λ	203	Φ	235	Ì
12	FF	44	,	76	L	108	l	140	ᵏ	172	μ	204	∫	236	Ò
13	CR	45	-	77	M	109	m	141	ˣ	173	ν	205	∫	237	Ù
14	SO	46	.	78	N	110	n	142	ⁱ	174	ς	206	£	238	à
15	SI	47	/	79	O	111	o	143	ʲ	175	ο	207	₤	239	è
16	DL	48	0	80	P	112	p	144	ᵏ	176	π	208	₥	240	ì
17	D1	49	1	81	Q	113	q	145	ˣ	177	ρ	209	Ç	241	ò
18	D2	50	2	82	R	114	r	146	⁺	178	σ	210	ç	242	ù
19	D3	51	3	83	S	115	s	147	′	179	τ	211	Ñ	243	Â
20	D4	52	4	84	T	116	t	148	⁻	180	υ	212	ñ	244	Ê
21	NK	53	5	85	U	117	u	149	Ä	181	φ	213	₩	245	Î
22	SY	54	6	86	V	118	v	150	Ë	182	χ	214	₵	246	Ô
23	EB	55	7	87	W	119	w	151	Ï	183	ψ	215	∫	247	Û
24	CN	56	8	88	X	120	x	152	Ö	184	ω	216	Σ	248	â
25	EM	57	9	89	Y	121	y	153	Ü	185	Ω	217	≃	249	ê
26	SB	58	:	90	Z	122	z	154	ä	186	½	218	ⁿ	250	î
27	EC	59	;	91	[	123	{	155	ë	187	¼	219	±	251	ô
28	FS	60	<	92	\	124	|	156	ï	188	⎩	220	÷	252	û
29	GS	61	=	93	]	125	}	157	ö	189	⎨	221	≠	253	∴
30	RS	62	>	94	^	126	~	158	ü	190	⎭	222	¿	254	÷
31	US	63	?	95	_	127	▮	159	Ÿ	191	↑	223	Á	255	◊

Control Codes and Escape Characters

Use the following codes and characters with label functions, or with any function that defines a string of text between delimiters, such as the TITLE key, or the TITLE, TEXT, KEYDEF, or ACTDEF programming commands. For an example, see the TITLE command in the *HP 70000 Modular Spectrum Analyzer Programming Manual*.

Position the Pen, Clear or Move Text, or Beep

Enter the codes listed in Table D-2 between the delimiters for the label function.

Table D-2. Control Codes

ASCII Code	Function	Description
7	beeper (B_L)	Sound beep.
8	back space (B_S)	Move pen back by one character width.
12	form feed (F_F)	Clear line of text, then move pen to left side of line.
13	carriage return (C_R)	Move pen to left side of display, to beginning of line.
27	escape (E_C)	Use with functions listed in Tables D-3 and D-4.

The characters in Table D-3 must be preceded by the ASCII code for escape (27), as shown by E_C in the table. Enter both the escape code and the characters between the delimiters for the label function.

Table D-3.
Escape Characters that Control the Pen, Clear Text, and Scroll Text

Character*	Description
E_CC	Move pen right by one character.
E_CG	Move pen to the left side of the display (carriage return).
E_CK	Clear to the end of the line.
E_CY	Turn on the display-function mode*.
E_CZ	Turn off the display-function mode*.
E_C& | |	Initiate functions listed in Table D-4.
*See "Display Function Mode" at end of appendix. E_C indicates ASCII code for escape (27).	

Enhance Text

The characters in Table D-4 must be preceded by the ASCII code for escape (27) and "&" (see Table D-3). All characters and codes must be entered between the delimiters of the label function,which must be assigned a nonzero item number. (See IT programming command.)

Table D-4. Escape Characters that Control Enhancements

Characters*	Description
E_C&dA	Turn on blinking.
E_C&dB	Turn on inverse video.
E_C&dC	Turn on inverse video and blinking.
E_C&dD	Turn on underline.
E_C&dE	Turn on underline and blinking.
E_C&dF	Turn on underline and inverse video.
E_C&dG	Turn on underline, inverse video, and blinking.
E_C&d@	Turn off enhancements.
*E_C indicates ASCII code for escape (27).	

Change Color

Pen colors are available on the HP 70004A color display, which are selected by the PEN programming command. The color that PEN selects can be overridden by executing the ASCII code for escape (27), followed by "&v", an integer, and "S" (for example, E_C&v10S). The escape-character sequence must be entered between the delimiters of the label function, which must be assigned a nonzero item number. (See IT programming command.)

To select the color of letters, enter an integer from 1 to 15. To select the color behind letters, enter an integer from −15 to −1. To return to the color selected by PEN, enter a 0 (E_C&v0S).

Colors can be selected with the escape sequence up to three times for each label. The pen colors are not available on the HP 70205A graphics display or HP 70206A system graphics displays. Sending pen-color escape sequences to the the HP 70205A graphics display or HP 70206A system graphics displays causes errors. For more information about pen numbers and colors, see the *HP 70004A Color Display User's Guide*.

Display-Functions Mode

When the display-function mode is on, the control codes and characters are displayed in the label; their associated functions (inverse video, underlining, and so on) are not executed, with the exception of carriage return and line feed, which are executed. When the mode is off, the code and character functions are executed instead of displayed. The mode is off when a label is created. When a label is assigned a nonzero number with the IT command, the mode is on, and E_CY and E_CZ have no effect.

Glossary

active function readout
Area at left of screen that displays the active function and its state. The active function is determined by the last completed programming command or key function.

active marker
Marker which can be repositioned by programming commands or front-panel controls.

active trace
Trace that is being updated (swept) with incoming signal information. Only traces A, B, and C can be active. *See* **trace**.

address, HP-IB
See **HP-IB** and **address map**.

address, HP-MSIB
See **address map**.

address map
A modular measurement system consists of instruments. Instruments can be stand-alone instruments, such as the HP 70004A color display, or can consist of one or more modules which are plugged into a mainframe or display.

When incorporated into a system, the function of each module or stand-alone instrument is determined by its position in the system. As a visual aid, all positions are displayed on a map called the **address map**. The address map is is a grid consisting of a series of columns and rows.

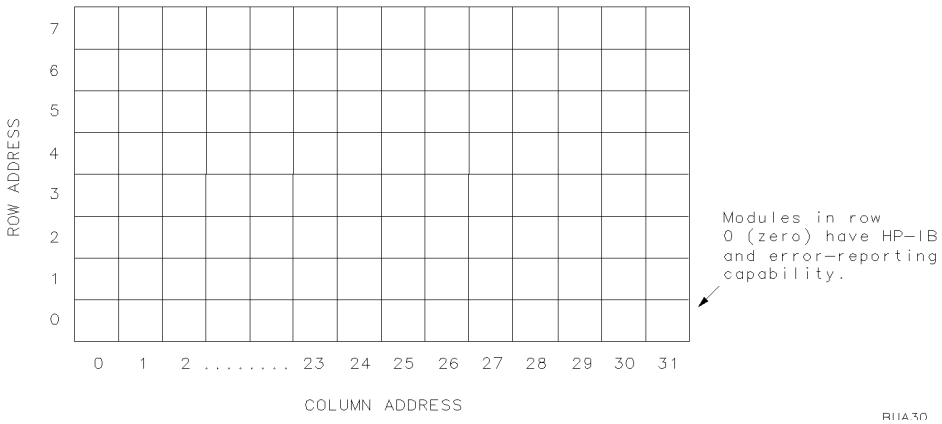

Address Map Illustrates HP-MSIB Addresses for Row and Column.

Any module located in row 0 can be controlled via the Hewlett-Packard Interface Bus (HP-IB), provided the module has HP-IB capability. In addition, modules or instruments in row 0 can report system errors. The local-oscillator and display modules are usually positioned in row 0 to access HP-IB and report errors.

For simplicity, stand-alone instruments and modules will be referred to as modules in the following discussion.

All modules are connected via the internal Hewlett-Packard Measurement System Interface Bus (HP-MSIB). Their relative position determines how they interact. Modules can either, (1) control other modules or, (2) be controlled by other modules.

By definition, a controlling module controls all modules in the address map that are located above and to the right, unless a second module resides to the right of the first controlling module, in the same or lower row. In this case, the territory of the controlling module ends at the column occupied by the second module. (See the shaded area of the address map.)

A controlling module is called a **master** and a controlled module is its **slave**. The address map shows two local-oscillator masters and the modules they control. The local oscillator in row 0, column 18, controls any modules in the shaded area.

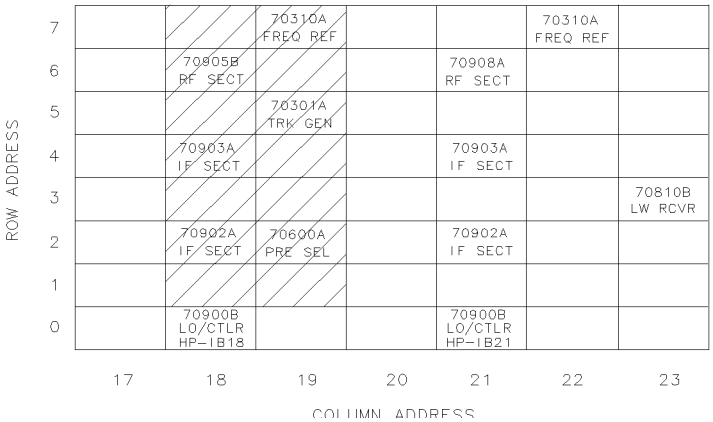

The address map contains two multi-module instruments (spectrum analyzers) which are controlled by modules in row 0. The HP 70900B local oscillator source controls the modules in the shaded area.

The display module is neither a master nor a slave.

All modules have an HP-MSIB address, which is defined as the row and column number where a module resides on the address map. In the address map, the HP-MSIB address of the HP 70600A preselector ("70600 A PRE SEL" in the map) is 2, 19.

HP-MSIB address 0, 31 and HP-IB address 31 are illegal.

amplitude accuracy

Uncertainty of the amplitude calibration of the analyzer. This uncertainty consists of several components:

- flatness of frequency response
- switching of the input attenuator
- switching between bandwidths
- IF gain of the log amplifier
- amplitude accuracy of the display and the built-in calibrator.

amplitude-left marker

Represents marker #2 during the relative-marker mode. The marker is positioned relative to the position of marker #1. When amplitude-left marker is displayed, marker readouts give the amplitude and frequency difference between markers #1 and #2.

amplitude-right marker

Represents marker #3 during the relative-marker mode. The marker is positioned relative to the position of marker #1. When the amplitude-right marker is displayed, marker readouts give the amplitude and frequency difference between markers #1 and #3.

argument

Command suffix which varies the function of a programming command. In the syntax diagrams, any mnemonic inside a circular envelope that follows the command name is an argument. Examples are EP (enter parameters from front-panel) and DN (step down).

attenuation

See **internal attenuation** and **external attenuation**.

bandwidth shape factor

Measure of how wide the spectrum-analyzer IF filter is below the 3 dB points.

Describes analyzer capability to resolve closely spaced signals of unequal amplitudes.

Shape factor is normally the ratio of the 60-dB bandwidth divided by the 3-dB bandwidth. The smaller this ratio, the sharper and more selective is the filter.

blank mode

The specified trace (A, B, or C) is removed from the screen and stored in **reserved memory**.

broadband response

Displayed on the spectrum analyzer when its bandwidth is wider than the discrete frequency components of the received impulsive signal. In this mode, each displayed response represents more than one frequency component. More specifically, each response represents a pulse that occurs every 1/PRF seconds with an amplitude proportional to the amplitude of the spectrum envelope. This occurs, for example, when the spectrum-analyzer bandwidth is wider than the pulse repetition frequency (PRF) of a pulsed transmission.

To check for broadband response, vary the spectrum-analyzer bandwidth, sweep time, or span width. A broadband response is present when any of the following conditions are met:

- Amplitude varies directly with the spectrum-analyzer bandwidth. For example, doubling the bandwidth increases the displayed amplitude by 6 dB.
- Line spacing depends on sweep time. Thus, increasing the sweep time widens the spectral line spacing.
- Span does not affect line spacing.

See **narrowband response**.

character set

Set of characters used to enter text into the **data line** or **title line**. Select a character for transfer by positioning the cursor with the step keys or knob.

chirp

In optical systems, chirp is the switching in optical frequency when typical laser diodes are pulsed between two different optical power levels or intensity modulated. Chirp results from an increasing drive current that either causes a higher temperature or a change in the effective index of refraction, which increases the wavelength via the change of length of the laser's resonant cavity. Chirp effectively broadens the laser's spectral bandwidth, which results in a reduced system bandwidth because of **chromatic dispersion**.

chromatic dispersion
Chromatic dispersion is pulse broadening due to the different velocities of different colors contained in the spectrum of the source; the pulse broadening depends directly on the spectral width of the source. Chromatic dispersion is basically a material property; it also contributes to the reduction of the bandwidth of the multimode fiber. Chromatic dispersion cannot be measured directly; instead, multimode dispersion adds quadratically to the measurement result.

clear-write mode
The specified trace (A, B, or C) is swept and updated each time the trigger conditions are met.

column
See **address map**.

command
Code that controls operation of modular measurement instruments. The local-oscillator module responds to programming commands that are described in this manual. The display responds to a different set of programming commands, which are described in documentation for the HP 70004A color display, HP 70205A graphics display, and HP 70206A system graphics display. *See* **function**.

System-level commands form the operating system for computer-controlled measurements. Examples of system-level commands are CLEAR or OUTPUT in the HP BASIC language.

compatible functions
See **function**.

continuous sweep mode
Active traces are swept continuously. The sweep begins each time the trigger conditions are met.

correction factors
Offsets applied to spectrum-analyzer circuitry to compensate for circuit errors when using a particular input port. The calibration functions can apply the offsets individually or all at once to the following parts of the spectrum analyzer:

- logarithmic amplifiers
- resolution bandwidths
- front-end circuitry
- attenuator
- step-gain amplifiers

data line
Area at bottom of screen for data entry, such as for the `COMMAND` and `debug` functions.

debug mode
Mode activated with DEBUG programming command or front-panel `debug` keys, where spectrum-analyzer commands are displayed in the **data line** as each command is executed. When a faulty command is encountered, operation of a computer program or user-defined function stops. The last characters in the data line (at the right end) form the faulty command.

delta marker
Second marker that is positioned relative to the position of the normal marker. When the delta marker is displayed, the marker readouts give the amplitude and frequency difference between the delta and normal (reference) markers.

destination
Component in syntax diagram where function results are stored.

display line
Horizontal line on spectrum-analyzer display that represents a specific amplitude level for trace-math functions.

distributed-feedback (DFB) laser
A semiconductor laser which is capable of producing a single wavelength (frequency).

dynamic range
Maximum power ratio of two signals simultaneously present at the input that may be measured within the limits of specified accuracy, sensitivity, and distortion.

element
A point that represents a fixed location on the horizontal axis of a trace. Each point contains amplitude information.

enter statement
Computer program line that receives data via HP-IB.

external attenuation
Attenuation located outside of the spectrum analyzer, before the spectrum analyzer input.

external memory
See **user memory**.

external mixing bands
Available frequency bands when an external mixer is connected to the spectrum analyzer.

External Mixing Bands and Associated Mixing Harmonics

Band	Harmonic Number	Frequency Range
K	6–	18.0 – 26.5
A	8+	26.5 – 40.0
Q	10+	33.0 – 50.0
U	10+	40.0 – 60.0
V	14+	50.0 – 75.0
E	16+	60.0 – 90.0
W	18+	75.0 – 110.0
F	24+	90.0 – 140.0
D	30+	110.0 – 170.0
G	36+	140.0 – 220.0
Y	42+	170.0 – 260.0
J	50+	220.0 – 330.0

extinction ratio
The ratio of the high-level optical power to the low-level optical power in a transmission system is called the extinction ratio.

ferrule
A tube which contains the optical fiber. The ferrule is necessary to keep the fiber aligned.

firmkey
See **key**.

firmware
Read-only memory (ROM) that dictates the operating characteristics of a module. Each firmware version has an identifying date code.

The local-oscillator firmware determines the operating characteristics of the spectrum analyzer. To learn the local-oscillator firmware date code, press (MENU), `Misc`, `MORE`, `service`, `ROM VERSION`. The date code for the display firmware is displayed when the display is powered up.

flatness
Describes the amplitude variations corresponding to the tuning frequency of the spectrum analyzer. Flatness of ±1 dB means the maximum and minimum values of the frequency response of the spectrum analyzer are less than 2-dB apart.

frequency stability
Refers to the stability of the spectrum analyzer. Two measures of frequency stability are used, short term and long term. Residual frequency modulation (FM) and noise sidebands are a measure of short-term stability. Drift is a measure of long-term stability.

FTZ
The abbreviation for Fernmeldewesen Technischen Zentrum. This is the part of the German post office that regulates EMI (electromagnetic interference).

function
The spectrum analyzer and its display each contain a unique set of functions that are executed with front-panel keys and programming commands. The characteristics of these functions are determined by the firmware in the local-oscillator and display modules.

User-defined functions are created by the user with the FUNCDEF or ACTDEF command and may be executed with the front-panel keys after `execute dlp` is pressed.

User-defined functions are stored in **internal memory** and remain permanently unless they are altered or erased by `PARTIAL ERASE` or certain programming commands, such as the FORMAT, LOAD, PURGE, DISPOSE, PERASE, ERASE, ACTDEF, RCLD, or FUNCDEF command.

Compatible functions are programming commands that have the ability to operate on other analyzer commands, called **predefined functions**.

See **firmware**, **user memory**, and **reserved memory**.

gain compression
Condition where change in spectrum-analyzer response is not directly proportional to change in input-signal level. By definition, gain compression occurs when the change in spectrum-analyzer response is less than the change of the input-signal level by a specific amount, usually 1 dB.

graphics window

Alternate coordinate system for display of stored trace data or custom graphics, as defined by the DWINDOW programming command. *See* **instrument window**.

harmonic distortion

Occurs when the input signal is of sufficient amplitude to create harmonics (distortion) of the input signal which appear as signals on the display even though they are not actually present at the spectrum-analyzer input.

The amplitude of harmonic-distortion products is dependent on the signal levels at the spectrum-analyzer input and the mixer characteristics. Not all harmonic-distortion products may be visible. To test a response for harmonic distortion, attenuate the input signal by 10 dB while watching the display. For each 10-dB change of attenuation, the amplitude of true responses decreases 10 dB, while the amplitude of harmonic-distortion responses decreases by multiples of 10 dB. Thus, second-order responses decrease 20 dB for each decrease of 10 dB at the input. Third-order responses decrease 30 dB, etc.

harmonic mixing

A technique that extends the frequency range of the spectrum analyzer. A response is displayed when the input signal satisfies the following equation:

$$F_{in} = N \times F_{LO} + F_{IF}$$

where

F_{in} is frequency of input signal
F_{LO} is frequency of the spectrum-analyzer local oscillator
F_{IF} is first IF frequency of the spectrum analyzer
N is the harmonic number of the analyzer local oscillator

Thus, mixing with the harmonics of the local oscillator extends the spectrum-analyzer frequency range to higher and higher frequencies.

Frequency Ranges and Corresponding Harmonic Numbers

	Band/Range	Harmonic Number and Sign of IF
Internal Mixing - HP 71210C	2.9 – 6.2	–1
	6.0 – 12.7	–2
	12.5 – 19.9	+3
	19.7 – 22.0/26.5	+4
Internal Mixing - HP 71200C	2.9 – 6.2	–1
	6.0 – 12.8	–2
	12.6 – 22.0	–4
External Mixing - HP 70907A	K 18.0 – 26.5	+6
	A 26.5 – 40.0	+8
	Q 33.0 – 50.0	+10
	U 40.0 – 60.0	+10
	V 50.0 – 75.0	+14
	E 60.0 – 90.0	+16
	W 75.0 – 110.0	+18
	F 90.0 – 140.0	+24
	D 110.0 – 170.0	+30
	G 140.0 – 220.0	+36
	Y 170.0 – 260.0	+42
	J 220.0 – 330.0	+50

HP BASIC language system

Forms the computer operating system that exercises the program examples in this manual.

HP-IB

Hewlett-Packard Interface Bus. Supports IEEE-488 and IEC-625, which are worldwide standards for instrument interfaces. Accessed at rear-panel of computer and all HP-IB controlled peripherals (disk drive, printer, plotter, spectrum analyzer, and so on).

Up to 15 devices may be connected to the HP-IB interface at a time. All devices connected to a particular HP-IB interface are distinguished from each other by an HP-IB address. Similarly, each HP-IB computer interface has a select code which distinguishes it from other interfaces in the system. The spectrum analyzer is preset at the factory to have an HP-IB address of 18. For convenience, an HP-IB connector with select code 7 is provided on the

rear panel of many Hewlett-Packard computers, including the HP 9000 Series 200 and 300 computers.

HP-MSIB
See **address map**.

IF feedthrough
Since the spectrum analyzer is a heterodyne receiver, an input signal equal in frequency to the first IF lifts the entire baseline, regardless of the frequency-control settings. This phenomenon known as IF feedthrough obscures the display and can completely submerge other signals present. To eliminate any gap in the analyzer frequency coverage, an alternate IF with appropriate filtering must be available and the two IFs must not be harmonically related. A preselector also eliminates IF feedthrough.

input number
Input ports (for measuring input signals) are numbered consecutively starting with 1.

instrument window
Portion of screen dedicated as the display for a modular measurement system instrument. Size of window is determined by `ASSIGN WINDOW` (press [DISPLAY] to access it) or IWINDOW programming command. *See* **graphics window**.

interferometer
See **Mach-Zehnder interferometer (MZI)**.

internal attenuation
Attenuation located inside the spectrum analyzer, after the RF INPUT.

internal memory
See **user memory**.

item
A series of programming commands which form a shape for repeated graphics applications. Created with the IT command.

key
Spectrum-analyzer functions are accessed by front-panel keys. The keys surrounding the graticule are called **softkeys** and access all the spectrum-analyzer functions. Commonly used functions can be executed with the keys on the instrument keypad, located beneath the display on some models, such as the HP 70004A Display.

Any group of keys that can be accessed at one time form a menu. Menus are organized in levels. The highest-levels are accessed with the [USER], [MENU], or [DISPLAY] keys.

limit line
A limit line is a test limit consisting of a series of line segments positioned according to frequency and amplitude in the spectrum-analyzer measurement range. Two limit lines can be defined, one for the upper limit, another for the lower limit. Once defined, trace data can be compared to the limit lines as the spectrum analyzer sweeps. When the trace data exceeds the upper or lower limits, the spectrum analyzer beeps or returns test results to the computer.

limit-line file
User-memory file that contains limit-line table entries. When recalled with `recall to...` or LOAD programming command, limit-line table is cleared and contents of file are loaded into the limit-line table. *See* **limit line**.

limit-line table
Table reserved for entry of limit-line parameters. *See* **limit line**.

linear input level
Maximum input-signal level where gain compression does not occur. *See* **gain compression**.

linear mode
Displays measurement results in linear amplitude scale. The bottom of the screen equals zero volts. During linear mode, the amplitudes of measured signals are from 0 to 10,000 measurement units. *See* **measurement units**.

linewidth
Linewidth refers to the spectral bandwidth of an individual mode (line) of the cavity modes of a laser diode.

LO feedthrough
Response that occurs when the first local-oscillator (LO) frequency is equal to the first intermediate frequency (IF). In Hewlett-Packard spectrum analyzers, the LO feedthrough represents 0 Hz on the horizontal axis of the graticule.

LO emission
The first local-oscillator energy that passes through the input mixer and any filters, then out of the spectrum-analyzer RF input port.

logarithmic mode
Displays measurement results in logarithmic scale. The amplitudes of measured signals are from −32,768 to +32,767 measurement units. *See* **measurement units**.

Mach-Zehnder interferometer (MZI)
In classic optics, Mach-Zehnder interferometers are constructed for collimated (open) beams. They are typically used for the measurement of the refractive index of an unknown material. In fiber optics, MZIs consist of fibers and couplers. In both cases, optical radiation is split into two branches; one branch is manipulated, and then the two branches are recombined. In the process of recombination, the electric fields produce variable optical interference which is then analyzed. The fiber-optic MZI can be used to measure the linewidth of single-frequency lasers.

marker
Bright dot on trace used for reading information about the trace without having to compare the trace to the graticule.

marker tracking
Spectrum-analyzer function that maintains the marked position of an active trace at the center frequency, regardless of span setting. Activated by the MKTRACK programming command or `SIG TRK On Off`.

master
See **address map**.

maximum input level
Input damage level of the spectrum-analyzer front-end. Two figures are usually specified. One is the burnout level of the mixer and the other is the damage level of the input attenuator. For example, −4 dBm may be the mixer burnout level and +30 dBm the damage level for the input attenuator. *See* specifications in the *HP 70000 Modular Spectrum Analyzer Installation and Verification Manual*.

From a measurement standpoint, the maximum input level is the signal level into the input mixer which maximizes the difference between the signal level and the spectrum-analyzer

generated distortion products, or is the displayed average noise level for the given resolution bandwidth, whichever is greater.

measurement units

Unit for storage of trace information in trace arrays (that is, traces A, B, and C and any **user-defined traces**). For logarithmic trace information, a measurement unit is one hundredth of a dBm:

$$[\text{value in dBm}] \times 100 = \text{measurement units}$$

For linear trace information, measurement units are defined as 0 (zero) for the bottom of the display, and 10,000 for the top (reference level).

The measurement-unit range is restricted to integers between −32,768 and +32,767. Since measurement units are restricted to integers, −10.115 dBm equals −1012 measurement units, *not* −1011.5 measurement units.

memory

See **user memory** and **reserved memory**.

memory card

External memory where the contents of **internal memory** can be stored. *See* **user memory**. Available on HP 70004A color display.

menu

Group of keys that can be accessed at one time and are displayed simultaneously at one or both sides of the graticule. *See* **key**.

message area

Information area at the right of the display graticule where operation messages are displayed, such as "UNCAL" (uncalibrated) and "UNCOR" (uncorrected). Status-byte register is set whenever a message appears in message area.

narrowband response

Displayed on spectrum analyzer when the analyzer bandwidth is narrow enough to resolve the discrete frequency components of the received signal. For example, since the individual spectral components of a pulsed RF transmission are spaced at the pulse repetition frequency (PRF), the spectrum analyzer displays a narrowband response when its bandwidth is narrower than the PRF.

To be sure that all components are resolved regardless of their relative amplitudes, the spectrum-analyzer bandwidth should be less than 0.3 times the PRF.

To check for narrowband response, vary the spectrum-analyzer bandwidth, span width, or sweep time while watching the responses on the analyzer screen. A narrowband response is present when any of the following conditions are met:

- Amplitude of a response does not change as the bandwidth is varied.
- Widening the span width decreases spacing between spectral lines.
- Sweep-time changes do not affect spectral line spacing.

See **broadband response**.

noise sidebands

Measure of the spectrum-analyzer spectral purity. This specification is significant during spectral purity measurements when the analyzer must be more spectrally pure than the signals it measures in order to attain enough resolution. Noise sidebands are specified in dB relative to the carrier (dBc), in a specific bandwidth.

normal marker
Active marker that describes point on trace in absolute terms.

normal marker mode
Active marker is positioned in absolute terms of frequency or time. Marker readout shows the amplitude and frequency at the marker position, except during **zero span mode**, where the time value of the active marker position is indicated instead of frequency.

numerical aperture (NA)
Numerical aperture and the core diameter determine how much power can be launched into the multimode fiber. The numerical aperture is the sine of half the maximum angle of acceptance.

optimum resolution bandwidth
Bandwidth which provides the most convenient display commensurate with span width and reasonable sweep time.

output statement
Computer program line that sends data via HP-IB.

parameter units
Standard scientific unit. In its preset state, the analyzer returns to the computer all measurement results in parameter units:

Parameter Units

Measured Data	Fundamental Units
Frequency	Hertz
Power	dBm
Ratio	dB
Voltage	Volt
Time	Second
Current	Ampere
Impedance	Ohm

peak detection mode
Method of selecting values from continuous amplitude values detected.

PIN photodetector
The PIN photodetector is the most important detector type due to its simiplicity, stability, and bandwidth. Its principle of operation is that whenever the energy of an entering photon is comparable to the band gap energy of the material, the photon energy is absorbed and an electron-hole pair is generated in the i-zone (intrinisic zone, a zone of low conductivity) of the photodetector. An ideal photodetector with negligible recombination would generate one electron-hole pair per photon.

position units
Describes the position of a point along the horizontal axis of a trace. The point at the left end of the trace has a position-unit value of *1*. The point at the right end of a 800-point trace has a position-unit value of *800*.

predefined functions
Subset of analyzer programming commands that can be used as sources for another subset of analyzer commands, called **compatible functions**. *See* **function**.

predefined trace
See **trace**.

predefined variable
See **variable**. *Also see predefined variable* in Table 2-2.

prefix
Letters that precede the file number specified by the `save to...` keys. Used to identify contents of file in **user memory**. The default prefixes are listed below:

- A state-register file has an "s_" prefix.
- A limit-line file has an "l_" prefix.
- A program file has a "d_" prefix.
- A (USER)-key file has a "u_" prefix.
- A trace file has "t_" prefix.

Use `CHANGE PREFIX` or the PREFX programming command to change the prefix by inserting characters to the left of the underscore (_).

preselector
Bandpass filter that passes the desired signal to the spectrum-analyzer input. A tracking preselector is a voltage-tuned bandpass filter (typically 20 – 50 MHz) which tracks the analyzer tuning and is used with harmonic-mixing spectrum analyzers to eliminate image, multiple, and spurious responses.

preselector DAC
Digital-to-analog converter that controls the preselector tracking and affects amplitude accuracy.

program file
User-memory file stored in external memory only. The file contains user-defined variables, traces, functions, or limit lines. When recalled with `recall to...` or LOAD programming command, file contents are stored in **internal memory** or **reserved memory**. *See* **user-defined variables**, **user-defined traces**, **user-defined functions**, and **limit line**.

P_1, P_2
Points that indicate the lower left and upper right corners of a coordinate system, for graphics purposes. Can apply to prints or plots on peripheral devices. Also indicates the lower left and upper right corners of the instrument window, where measurement results are displayed. *See* **graphics window** and **instrument window**.

query
Any spectrum-analyzer programming command ending with a question mark (?). A query returns information to the computer. Programming is described in the Programming Fundamentals chapter.

reference level
During normal operation, the reference level is the top graticule line and represents an absolute amplitude value. When present, arrows to the right and left of the graticule indicate an alternate reference level position. During stimulus-response measurements, the reference level may instead represent a 0 dB level where no power is lost or reflected. *See* **relative-amplitude scale**.

reference marker
Reference for active marker when delta, relative-left, or relative-right marker has been activated. Active-marker position, amplitude, and frequency are relative to the reference marker.

reference number
All modules have a reference number, which is used by certain programming commands, such as INPUT MOD. *See* INPUTMOD command description in the Language Reference chapter.

referenced graphics
Graphics that are defined with the item command, IT.

relative-amplitude scale
See **stimulus-response mode**.

relative intensity noise (RIN)
The measurement of relative intensity noise describes the laser's maximum available amplitude range for signal modulation and serves as a quality indicator of laser devices.

RIN is a ratio of the mean-square optical-intensity noise to the square of the average optical power:

$$RIN = \frac{<\Delta P^2>}{P^2}\ dB/Hz$$

where

$<\Delta P^2>$ is the mean-square optical-intensity fluctuation (in a 1 Hz bandwidth) at a given frequency and P is the average optical power.

The ratio of optical powers squared is equivalent to the ratio of the detected electrical powers. Thus, RIN can also be expressed as follows:

$$RIN = \frac{N_{\text{elec}}}{P_{\text{AVG(elec)}}}\ db/Hz$$

where

N_{elec} is the power spectral density of the photocurrent at a specific frequency and $P_{\text{AVG(elec)}}$ is the average power of the photocurrent.

relative-marker mode
The active marker is positioned relative to the position of the reference marker. Marker readout shows amplitude, frequency, or time difference between the two markers.

reserved memory
Area reserved for storage of measurement results (traces A, B, and C), configuration information, and selections made with front-panel keys or programming commands. Stored items include

- Instrument settings
- Predefined variables
- Predefined traces (A, B, and C)
- Correction factors
- Limit-line-table contents
- Current menu of (USER) keys
- Power-on state

See **user memory**.

residual FM

Short-term measure of analyzer jitter or aberrations and is usually measured in a specific bandwidth, specified as so many hertz in one second (rms, peak, peak-to-peak or average). The narrowest useful resolution bandwidth and span are limited by the residual frequency modulation (FM).

residual responses

Responses which are displayed when no input signal is connected to the spectrum analyzer. These ever-present responses occur when the local-oscillator fundamental or its harmonics mix with a response of another internal oscillator fundamental or harmonic to produce signals at one of the IF frequencies of the analyzer.

resolution bandwidth

The filter width 3 dB below the maximum response of an IF filter; the 3-dB bandwidth of the analyzer final IF stage. By definition, two closely spaced, equal amplitude signals are just resolved if they are separated by an amount equal to the 3-dB bandwidth of the resolution filters. For example, a final IF bandwidth of 100 Hz just resolves two equal amplitude signals 100 Hz apart. However, if the two signals are less than 100 Hz apart, they are within the IF bandwidth at the same time and, therefore, appear as one signal.

responsivity

The responsivity of a detector is the ratio of its output current to the incident optical power. The responsivity of an amplified lightwave converter is the ratio of its output voltage to the incident optical power.

Rosenfell algorithm

Algorithm that translates the video signal as seen at the envelope detector from analog information, that is, continuously changing amplitude values, into digital information comprising a series of finite data points. The translation process divides the analog information into intervals, then chooses a value from each interval as the data point (element). The result is a combination of positive- and negative-peak detection, where the minimum value detected in one interval is displayed alternately with the maximum value detected in the previous two intervals. Signals that occur within the interval are displayed, even if they occur within an interval that displays the minimum value. Thus, broadband or impulsive signals less than an interval wide are captured and displayed.

The Rosenfell algorithm provides a display that resembles the analog display of older spectrum analyzers.

row

See **address map**.

scan (frequency span) linearity

Accuracy of the horizontal axis as shown on the display. The frequency error between two points on the graticule.

sensitivity

Measure of analyzer capability to detect small signals. Like most receivers, the maximum sensitivity of the analyzer is limited by its inherent average noise. Thus, an unknown signal can be detected when the signal power equals inherent average noise power:

[Signal power + inherent average noise power] ÷ inherent average noise power = 2

When viewed on the display, the signal appears about 3 dB above the inherent average noise level.

Referenced to the analyzer input, the inherent average-noise level has two components, thermal noise and noise resulting from the active elements:

$$P_{in} = 10\log KTB + N_o$$

where

P_{in} is inherent average noise, in dBm
K is Boltzmann's constant, in joules
T is absolute temperature, in °K
B is equivalent IF bandwidth, in Hz
N_o is analyzer noise figure (the contribution of the active elements) in dB.

From this definition, we can see that the inherent average noise is bandwidth dependent. Because of the power relationship above, a decade decrease in bandwidth results in 10-dB-lower noise level and consequently 10-dB-better sensitivity. When measuring inherent average noise level, a video filter with a bandwidth much less than the IF bandwidth should be inserted into the output circuit and the analyzer input should be terminated with its characteristic impedance.

service-request mask
See **status-byte register**.

signal resolution
Ability of the analyzer to resolve two real signals present at its input. Closely spaced signals are more difficult to resolve than widely spaced signals. Several factors, such as the final IF bandwidth and the shape factor, affect resolution. *See* **resolution bandwidth** and **bandwidth shape factor**.

single-sweep mode
Spectrum analyzer sweeps once on demand when trigger conditions are met. Each sweep is initiated by pressing `SINGLE SWEEP` or executing TS or FETCH programming command.

slave
See **address map**.

softkeys
Keys that surround the display area.

source
Components in syntax diagram on which function operates.

span
Equals the stop frequency minus the start frequency and determines the calibration of the horizontal axis of the spectrum analyzer.

spectrum analyzer
The spectrum analyzer presents the energy distribution of a signal as a function of frequency. Typically, measurement results are displayed in a coordinate system where the X and Y axis represent frequency and amplitude, respectively. The modular spectrum analyzer, however, can operate and store measurement results without a display.

There are two types of spectrum analyzers, real-time and nonreal-time. A real-time spectrum analyzer is tuned to the entire spectrum at once. Thus, it responds to changes in signals as they occur. A nonreal-time analyzer, also known as a scanning analyzer, is tuned to a single frequency at a given instant in time. So, to analyze several signals it sequentially scans through them one at a time. Because it must wait to tune to a particular frequency, it is not a real-time analyzer and the phenomenon under test must be repetitive or it may not be detected. Scanning analyzers are usually the superheterodyne receiver type in which the first local oscillator (LO) or some IF is swept. Hewlett-Packard modular spectrum analyzers are superheterodyne receivers with a swept first LO.

spurious response

Undesired response that is generated in the analyzer and displayed on the graticule. There are two types, harmonic and non-harmonic. Harmonic spurious responses are second, third, fourth, and so on, harmonics of the input signal. Non-harmonic spurious responses are intermodulation and residual responses. *See* **residual responses**.

start frequency

Beginning of measurement range.

state-register file

Area in **user memory** reserved for the storage of measurement results and associated analyzer settings.

status-byte register

Eight-bit byte that tells whether the following conditions have occurred:

- A service request has been generated.
- The analyzer has sensed a hardware or operator-usage error.
- A programming command has been executed and its operation has been completed.
- The measurement range has been swept (measured).
- The analyzer is prepared to sweep again.
- The analyzer is displaying a message in the message area on the right side of the screen (for example, "UNCAL" or "UNCOR").

Whenever a condition is satisfied, the analyzer sets the corresponding bit in the status byte true (to 1). This way, the operation of the analyzer can be monitored by a computer program with the use of the RQS or STB programming command.

The service-request mask defines the analyzer state that generates a computer service request. The mask is a copy of the status byte. When the value of the status byte matches the value of the mask, a service request is generated. (The value of bit 6 has no effect.)

Spectrum-Analyzer Status-Byte Register

Bit Number	Decimal Equivalent	Spectrum-Analyzer State	Description
7	128		Unused.
6	64	RQS	Set when status-byte register bit and corresponding bit in service-request mask are true. Indicates service-request has occurred.
5	32	ERROR PRESENT	Set when error register contains an error.
4	16	COMMAND COMPLETE	Set at completion of command execution.
3	8		Unused
2	4	END OF SWEEP	Set at completion of sweep.
1	2	MESSAGE	Set when message appears, such as UNCAL (uncalibrated), UNCOR (uncorrected), or power bar zeroing.
0	1	TRIGGER ARMED	Set when analyzer is ready to receive a sweep trigger.

step keys
Front-panel controls, ▲ and ▼, that increase or decrease the active function value by a predetermined value. In the syntax diagrams, the UP and DN arguments simulate the pressing of the step keys.

steps
Increment of change effected by the front-panel step keys, ▲ and ▼, and the UP and DN programming-command arguments.

stimulus-response mode
Analyzer is configured to make stimulus-response measurements. The stimulus-response mode is available in analyzer systems containing a tracking generator and is activated with the `STM RSP On Off` key or MEASURE programming command.

Displays measurement results in relative-amplitude scale, in dB. Thus measurement results represents a variation, plus or minus, from a reference which is usually stored in a trace.

stop frequency
End of measurement range.

sweep time
Total time duration of one full sweep.

system-level command
See **command**.

threshold
Level on display. Signals below the threshold are not displayed. Use `THRESHLD On Off` or TH programming command to set the threshold level.

title line
Area near top of screen reserved for display of text with TITLE or TITLE programming command.

top level keys
Group of keys accessed by pressing the (USER), (MENU), or (DISPLAY) keys. *See* **key**.

trace
Array made up of a series of data points that contain amplitude information.

Traces A, B, and C are the predefined traces. Pressing (INSTR PRESET) or TRACE PRESET gives traces A, B, and C 800 points each. All three traces can be swept. *See* **active trace**.

The user-defined traces are created and stored in **internal memory** with the TRDEF programming command. The amplitude values in user-defined traces remain permanently in **internal memory** unless they are altered or erased with certain programming commands, such as math commands (ADD), or PURGE, LOAD, STOR, RCLD, DISPOSE, ERASE, FORMAT, or PERASE. They are also erased with PARTIAL ERASE. *See* **user memory**

trace window
Trace window that contains a weighting algorithm used for fast Fourier transforms. The fast-Fourier transform function (FFT) ideally operates on an infinitely long series of data. Since this is not practical, the weighting algorithm in the trace window is used to modify the contents of a trace array before transforming, so that its endpoints gradually reduce to zero amplitude. The TWNDOW programming command supplies three predefined trace windows. The FFT programming command executes the Fourier-transform function.

tracking error
Difference between the tracking generator output frequency and the analyzer tuning. This error affects the accuracy of tracking-generator measurements and should be adjusted to as small a value as possible. The TRACKNG ADJUST or TRACKNG PEAK key or SRCTK programming command adjusts tracking error.

tracking generator
Produces a signal that tracks the spectrum-analyzer frequency tuning. In addition to the standard analyzer applications, the spectrum-analyzer/tracking-generator system determines the frequency response of unknown devices and precisely measures the frequency of unknown signals with a frequency counter.

tracking preselector
See **preselector**.

UNCAL
Prompt (uncalibrated) that appears when instrument settings affect accuracy of measurement results to the degree that they no longer meet specifications. Set instrument settings (for example, RB, VB, ST, SP) to automatic or change their values appropriately to remove the prompt.

UNCOR
Prompt (uncorrected) that appears when correction factors are not applied to measurement results, indicating they might not meet specifications. To apply correction factors, execute CAL. Also see description for CALCOR command.

units
See **measurement units**, **parameter units**, and **position units**.

user-defined functions
See **function.**

user-defined traces
See **trace.**

user-defined variable
See **variable.**

(USER)-key file
User-memory file that contains a menu of (USER) keys. When recalled with `recall to...` or LOAD programming command, the current menu of (USER) keys is erased and replaced with the contents of the file.

user memory
Memory is an area where information can be stored for future recall. Memory that is available for the user is called **user memory**. User memory has three locations:

- **Internal memory** located within the spectrum analyzer.
- **External memory** located on HP-IB, such as a disc drive.
- **External memory** located on HP-MSIB, such as the **memory card** in the HP 70004A color display.

Various types of articles can be stored in **user memory**. The articles can be divided into two types, ASCII and non-ASCII.

Catalog of User Memory

Stored Article	Storing and Recalling Commands	File Type	Default File Prefix
State-register file (Instrument settings and title-line)	STOR, SAVES, LOAD, RCLS	ASCII	s_
Program file*	STOR, SAVED	ASCII	d_
Trace file	STORE, SAVET, RCLT, LOAD	ASCII	t_
(USER) keys file	STOR, LOAD, RCLT, SAVET	ASCII	u_
Limit-line file	STOR, LOAD, LIMISAV, LIMIRCL	ASCII	l_
User-defined trace†	TRDEF, LOAD, RCLD	TRACE	none
User-defined variable†	VARDEF, LOAD, RCLD	VAR	none
User-defined function †	FUNCDEF, LOAD, RCLD	FUNC	none
Active user-defined function †	ACTDEF, LOAD, RCLD	AFUNC	none
On-end-of-sweep algorithm†	ONEOS, RCLD	ONEOS	none
Trace-amplitude correction offsets†	AMPCOR	AMPCOR	none

* Indicates article can be stored in external memory only.

† Indicates article can be stored only in internal memory with programming commands.

The non-ASCII articles are unique to the internal operation of the spectrum analyzer. These articles include user-defined variables and traces, which can be used for operations with

predefined variables and traces that represent the spectrum-analyzer key settings and measurement results.

The ASCII-type articles are files which can be stored in either internal or external memory. Notice that one of the files, the program file, stores the non-ASCII articles. When a program file is recalled, it is loaded into internal memory so that the non-ASCII articles can be used for data processing or other operations internal to the spectrum analyzer.

Use the mass-storage-interface command, MSI, or the `catalog & MSI` keys to select the desired user memory. When power is applied to the spectrum analyzer, internal memory is selected until the MSI command or the `INTRNL MEMORY`, `HP-IB DISK`, and `HP-MSIB DSK & CRD` keys selects another storage device.

Press (MENU), `Misc`, `catalog & MSI`, to inspect memory contents. Use the PURGE, DISPOSE, FORMAT or PERASE command *with care* to erase contents of user memory.

Note User memory can contain special routines that configure the (USER) keys with useful functions, such as scalar measurement keys or service diagnostic keys. PERASE and FORMAT erase *all* unprotected user memory. See PROTECT command for memory-protection instructions.

See "Memory" in the Programming Fundamentals chapter.

user state

Refers to state of all analyzer parameters that are determined by the user. These include

- All instrument settings (for example, center frequency, plotter parameters, length of trace A)
- Adjustable preset-conditions (for example, active input port when power is applied)
- Contents of **internal memory** (for example, user-defined traces)

See **reserved memory**.

variable

An alpha character from 1 to 12 characters long, representing a numeric value stored in the analyzer.

Predefined variables exist permanently in **reserved memory** and their values constantly change as the spectrum analyzer sweeps or changes its state. Examples of predefined variables are CF (center frequency) and MKA (marker amplitude). User-defined variables are created by the user with the VARDEF command and remain in **internal memory** until they are cleared with certain commands, such as PURGE or DISPOSE. A temporary variable is created by the ACTDEF command and stored in **internal memory**. This temporary variable can be used like a predefined variable. *See* **user memory**.

video bandwidth

Determines amount of video filtering. *See* **video filter**.

video filter

Post-detection averaging device which averages the noise present in the spectrum analyzer. A noise averaging filter is a low-pass filter whose bandwidth should be much narrower than the resolution bandwidth of the analyzer. Since the video filter is located after the IF (resolution) filters, it does not affect frequency resolution.

In some measurements, like AM, FM and pulsed RF demodulation, the video-filter bandwidth should be equal to or greater than the IF (resolution) bandwidth to pass the

demodulated waveform without distortion. Thus, measurement flexibility requires the analyzer to have wideband as well as narrowband video filters.

video trigger
Triggering mode where the analyzer sweep is synchronized to the envelope of the RF input signal. Recovers modulation during zero span mode.

view mode
The sweeping of the specified trace (A, B, or C) is suspended and the trace is displayed on the analyzer screen.

wavelength
Wavelength (λ) is the distance between two equal phase points (one complete wave) on a signal. The wavelength is equal to the phase velocity (the speed of light traveling in a dielectric material divided by the refractive index of the dielectric material) divided by the frequency.

window
See **graphics window**, **instrument window**, and **trace window**.

xnoise
A programmable external noise source drive for noise-figure measurements. Toggles 28 Vdc to a "Noise Source Drive" connector on the front panel of an HP 70620B preamplifier or HP 70621A preamplifier.

zero span mode
In this mode, the horizontal axis is calibrated in time and represents a single frequency. Thus, the analyzer is a tunable, variable bandwidth receiver. Amplitude variations of the signal amplitude versus time are displayed.

Index

1

`10 MHz out error`, hardware broken error, 7045, 6-32
`125 KZ to FFS`, hardware broken error, 7011, 6-26
`12.5 MZ to YTO LK BD`, hardware broken error, 7014, 6-27

2

`21.4MHz daisy chain`, diagnostics error, 0007, 6-3
`21.4 MHz error`, hardware broken error, 7006, 6-25
`21.4MHz input cable`, diagnostics error, 0020, 6-4
`21.4MHz input cable`, diagnostics error, 0030, 6-6

3

`300 MHz error`, hardware broken error, 7004, 6-25
`300 MZ AGC`, hardware broken error, 7020, 6-28
`300 MZ post fltr det`, hardware broken error, 7019, 6-28
`321.4 MHz error`, hardware broken error, 7005, 6-25
3-D
  horizontal trace, 4-73
  trace, 4-1
  vertical trace, 4-177

5

`50 MZ to sampler`, hardware broken error, 7018, 6-27

6

`600 MZ doubler level`, hardware broken error, 7021, 6-28
`6214 GHz error`, hardware warning error, 6017, 6-24

A

`A6 RAM checksum (battery)`, hardware warning error, 6002, 6-22
ACT indicator LED, 1-7, 1-22
active function
  blanking annotation for, 1-2
  changing the value of, 1-2
  readout, 1-14
active indicators
  troubleshooting, 5-3
Active-Trace Processing Function
  3-DIMEN On Off, 4-1
  A<-A+B, 4-2
  A-B->A On Off, 4-3
  A-B+DL On Off, 4-3
  A◀A*DL/(A+B), 4-7
  A◀A*DL/(A+B+C), 4-7
  A◀A*DL/B), 4-8
  A◀A*DL/C), 4-8
  A◀A−B, 4-9
  A◀A−B+DL, 4-9
  A◀(A−B)−C, 4-10
  A◀(A−B)−C+DL, 4-10
  A◀A−C, 4-11
  A◀A−C+DL, 4-11
  A◀DL*(A+B)/C), 4-12
  A XCH B, 4-22
  A XCH C, 4-23
  B<-B-DL, 4-23
  B XCH C, 4-29
  C<-B, 4-36
  CLEAR WRT A, 4-39
  CLEAR WRT B, 4-40
  CLEAR WRT C, 4-40
  HORZ OFFSET, 4-73
  LINES On Off, 4-87
  MAX HOLD A, 4-94
  MAX HOLD B, 4-94
  MAX HOLD C, 4-94
  MIN HOLD A, 4-96
  MIN HOLD B, 4-96
  MIN HOLD C, 4-96
  oneshot math, 4-106
  PERSIST On Off, 4-109
  STORE A, 4-158
  STORE B, 4-158

STORE C, 4-158
trace A B C, 4-165
TRACE LENGTH, 4-165
trace linmath, 4-166
trace logmath, 4-166
VERT OFFSET, 4-177
VID AVG On Off, 4-177
VIEW A/BLANK A, 4-180
VIEW B/BLANK B, 4-180
VIEW C/BLANK C, 4-180
`ADC error`, hardware broken error, 7802, 6-33
"ADC trig delay range", error, 4-170
address map
viewing the, 1-7
`A Hardware Selected`, operating error, 2011, 6-14
A indicator, 1-22
alternate gain compression level, 1-19–20
alternate reference level, 1-19–20
`Ampcr/span too large`, operating error, 2050, 6-20
amplitude
offset, 1-19–20
scale, 1-14
softkey menu, 2-3
Amplitude-Correction Function
AMPCOR -> LOWER, 4-14
AMPCOR -> UPPER, 4-15
lim &<-> ampcor, 4-84
LOWER-> AMPCOR, 4-92
UPPER-> AMPCOR, 4-173
Amplitude Function
A METER On Off, 4-12
AMPCOR On Off, 4-15
AMP REF OFFSET, 4-16
ATTEN AutoMan, 4-19
A UNITS AutoMan, 4-20
CPL AVG On Off, 4-48
dBm, 4-49
dBμV, 4-49
dBmV, 4-50
INPUT IMPED, 4-78
LINEAR, 4-86
LINEAR Vlt Pwr, 4-87
LOG dB/DIV, 4-91
MAX IN AutoMan, 4-95
MAX MXR LEVEL, 4-95
REF LVL, 4-131
REF LVL POSN, 4-131
STP GAIN AutoMan, 4-161
units menu, 4-172
VOLT, 4-181
WATT, 4-182
analyzer test
troubleshooting, 5-5
ASCII codes, D-1
asterisk (*), error messages, with an, 6-2
ATTEN AutoMan, 1-13
attenuation, 1-14
attenuator
coupling of, 1-13
uncoupled, 1-14–15
`ATTENUATOR Section`, diagnostics error, 0063, 6-10
AutoMan, 1-12
AutoMan softkey, 1-2

B

background tests
troubleshooting, 5-6
`bad file`, operating error, 2055, 6-21
`Bad IF/ENDIF nesting`, operating error, 2021, 6-16
`bad revision`, operating error, 2056, 6-21
`bad volume`, operating error, 2058, 6-21
Bandwidth Function
RB/SPAN RATIO, 4-124
RES BW AutoMan, 4-135
TRIGGER DELAY, 4-170
VBW CPL Rx SA, 4-176
VBW/RBW RATIO, 4-176
VID BW AutoMan, 4-178
VID LIN On Off, 4-180
bandwidth softkey menu, 2-5
`Battery failed`, operating error, 2049, 6-20
`B Hardware Selected`, operating error, 2012, 6-14
`Binary span atten`, hardware broken error, 7026, 6-29
block diagram
basic lightwave signal analyzer, A-2
basic spectrum analyzer, A-1
HP 70300A RF tracking generator, A-11
HP 70300A RF tracking generator, HP 70301A microwave tracking generator, and HP 70900B local oscillator source, A-12
HP 70301A microwave tracking generator, A-11
HP 70310A precision frequency reference, A-10
HP 70600A preselector, A-6
HP 70601A preselector, A-6
HP 70620A/B preamplifier, A-6
HP 70621A preamplifier, A-6
HP 70810B lightwave section, A-8
HP 70900B local oscillator source, A-10
HP 70902A IF section, A-9
HP 70903A IF section, A-9

HP 70904A RF section, A-7
HP 70905A/B RF section, A-7
HP 70906A/B RF section, A-7
HP 70907A external mixer interface module, A-6
HP 70908A RF section, A-7
individual modules, A-6–12
modular lightwave signal analyzer system, A-4
modular source, A-5
modular spectrum analyzer system, A-4
RF and microwave source, A-12
box, 1-19–20

C

cable connections, 1-7
cables
electrical, 1-10
`Cal error`, hardware broken error, 7007, 6-25
calibration
procedure, 1-9
`Calibration atten`, diagnostics error, 0028, 6-6
`Calibration atten`, diagnostics error, 0038, 6-7
Calibration Function
CAL ALL, 4-30
cal enable, 4-30
CAL GAIN, 4-31
CAL LOGAMP, 4-31
cal menu, 4-31
CAL RES BW, 4-32
CAL SRC INT EXT, 4-32
cal src values, 4-33
CAL VID BW, 4-33
FLATCAL On Off, 4-65
FREQ FOR CAL, 4-67
GAINCAL On Off, 4-70
LOG CAL On Off, 4-91
POWER FOR CAL, 4-111
RBW AMP On Off, 4-125
RBW FREQ On Off, 4-125
SYS COR AutoOff, 4-162
VBW AMP On Off, 4-175
CALIBRATOR signal
measurement of, 1-11–12
`Cal/I.F. cables?`, diagnostics error, 0042, 6-8
`Cal input incorrect?`, diagnostics error, 0062, 6-10
`CAL POWER lvl err`, operating error, 2041, 6-19
`Cannot lock YTO`, hardware broken error, 7012, 6-26
`Cannot test 70905/6B`, diagnostics error, 0061, 6-10
`Can't finetune YTO`, hardware broken error, 7013, 6-26
catastrophic failures, 5-22–26
catastrophic failure symptoms, 5-22
CENTER, 1-12
center frequency, 1-14–15
setting the, 1-12
character set, 1-19–20
check
preliminary, 1-7
`Check mixer bias`, operating error, 2026, 6-17
cleaning optical connectors, C-2–4
`Cmd out of sequence`, operating error, 2010, 6-14
`Command syntax error`, operating error, 2029, 6-17
computation error
8000, `Divide by zero`, 6-35
8001, `Float pt overflow`, 6-35
8002, `Log of zero`, 6-35
8003, `Log of negative`, 6-35
8004, `Integer overflow`, 6-35
8005, `Square root error`, 6-35
8006, `Modulus of zero`, 6-35
8999, `Float pt underflow`, 6-35
computation errors 8000 – 8999, 6-35
computer operation
running System Diagnostics software, 5-15
running the system diagnostics utilities, 5-20
troubleshooting procedures, 5-13
computer requirements
running System Diagnostics software, 5-16
`Confidence test failed`, hardware warning error, 6008, 6-23
`Confidence test passed`, hardware warning error, 6001, 6-22
connector care
fiber-optic, C-1–5
control
coupling between LG, LN, and DETSEL, 4-48
display of annotation for horizontal gradicule, 4-80
external video switch, 4-65
instrument behavior, receiver or spectrum analyzer, 4-176
positioning of displayed horizontal graticule lines, 4-71
trigger delay for selected ADC, 4-170
value of receiver mode flag, 4-176
video trigger display lines, 4-180

Control Codes, D-1
conventions
  notation, 1-1
  softkey, 1-1
Correction dac, hardware broken error, 7028, 6-29
coupled functions, 1-12
CRYSTAL bandwidths, diagnostics error, 0023, 6-5

D

data line, 1-19–20
Decade span atten, hardware broken error, 7025, 6-29
DEFINE USR KEY, 1-23–25
definition
  amplitude-correction functions, 3-23
  amplitude functions, 3-23
  bandwidth functions, 3-23
  calibration functions, 3-23
  display functions, 3-23
  error messages, 6-1
  external-mixer functions, 3-23
  frequency functions, 3-24
  instrument-state functions, 3-24
  lightwave functions, 3-24
  limit-line functions, 3-24
  marker functions, 3-24
  memory-related functions, 3-25
  power-meter functions, 3-25
  preamplifier functions, 3-25
  preselector functions, 3-26
  programming-related functions, 3-26
  service-related functions, 3-26
  signal-detection functions, 3-26
  signal-identification functions, 3-26
  signal-path functions, 3-26
  sweep and trigger functions, 3-26
  trace-processing functions, 3-27
  tracking-generator functions, 3-27
  user-defined functions, 3-27
detection mode, 1-19–20
diagnosing system problems, 5-7, 5-9
diagnostics error
  0001, NO LO?, 6-2
  0002, HP-MSIB addr 70902, 6-2
  0003, HP-MSIB addr 70903, 6-2
  0004, HP-MSIB addr 70904, 6-2
  0005, HP-MSIB addr 70905/6, 6-3
  0007, 21.4MHz daisy chain, 6-3
  0008, NO RF SECTION?, 6-3
  0009, NO I.F. SECTION?, 6-3
  0010, HP-MSIB addr 70907, 6-3
  0011, No EMIM Section?, 6-3
  0012, HP-MSIB addr 70600, 6-4
  0013, No PRESELECTOR?, 6-4
  0014, Incorrect System, 6-4
  0015, HP-MSIB addr 70700, 6-4
  0020, 21.4MHz input cable, 6-4
  0021, Video output cable, 6-5
  0022, LC bandwidths, 6-5
  0023, CRYSTAL bandwidths, 6-5
  0024, Problem/ampl low?, 6-5
  0025, Step gain amplifier, 6-5
  0026, Res BW-accuracy, 6-5
  0027, Res BW-amplitude, 6-6
  0028, Calibration atten, 6-6
  0029, Log amplifier, 6-6
  0030, 21.4MHz input cable, 6-6
  0031, Video output cable, 6-6
  0032, LC board, 6-6
  0033, Log board, 6-7
  0034, Problem/ampl low?, 6-7
  0035, Step gain amplifier, 6-7
  0036, Res BW-accuracy, 6-7
  0037, Res BW-amplitude, 6-7
  0038, Calibration atten, 6-7
  0039, Log amplifier, 6-8
  0040, Tune+Span, 6-8
  0041, RF attenuator, 6-8
  0042, Cal/I.F. cables?, 6-8
  0043, Problem/ampl low?, 6-8
  0044, Low/high band switch, 6-9
  0045, RF attenuator, 6-9
  0046, Step gain amplifier, 6-9
  0050, Res BW -- CF, 6-9
  0051, Res BW -- CF ampl, 6-9
  0052, Res BW -- CF ampl, 6-9
  0053, Res BW -- CF ampl, 6-10
  0060, RF attenuator, 6-10
  0061, Cannot test 70905/6B, 6-10
  0062, Cal input incorrect?, 6-10
  0063, ATTENUATOR Section, 6-10
  0064, RF Switch 1, 6-11
  0065, RF Switch 2, 6-11
  0066, RF Switch 3, 6-11
  0067, RF Switch 4, 6-11
  0068, RF Switch 1, 6-11
  0069, RF Switch 2, 6-11
  0070, RF Preamplifier, 6-12
directory full, operating error, 2059, 6-21
Discriminator unlock, hardware broken error, 7074, 6-33
display
  adjusting the color, 1-26
  annotation, 1-14–20
  control of annotation for horizontal gradicule, 4-80
  functions, 1-3
  in three-dimensions, 4-1

tests, 1-26
traces horizontally in three-dimensions, 4-73
vertical traces in three-dimensions, 4-177
video trigger display lines, 4-180
display-disruptive errors
troubleshooting, 5-5
Display Function
ANOTATN On Off, 4-18
CLEAR TO END, 4-39
DELETE CHAR, 4-53
DELETE or . . . , 4-54
DSP LIN On Off, 4-58
ENTER LINE, 4-60
grat control, 4-71
GRAT On Off, 4-71
GRATSCR On Off, 4-71
HOLD, 4-73
INSERT or . . . , 4-79
LABEL Y On Off, 4-80
LOCKOUT ANOTATN, 4-90
REPLACE or . . . , 4-134
SELECT CHAR, 4-145
SPACE, 4-151
THRESHD On Off, 4-163
TITLE, 4-164
DISPLAY key, 1-2, 1-3, 1-7
using the, 1-26
DISPLAY PRESET, 1-26
display tests
troubleshooting, 5-5
display troubleshooting procedures
HP-MSIB troubleshooting utility, 5-25
`Dist amp A error`, hardware broken error, 7034, 6-30
`Dist amp B error`, hardware broken error, 7035, 6-31
`Divide by zero`, computation error, 8000, 6-35
`Duplicate identifier`, operating error, 2014, 6-15

E

`EAROM unprotected`, hardware warning error, 6000, 6-22
`EEPROM check error`, hardware broken error, 7079, 6-33
E indicator, 1-22
element status indicators
troubleshooting, 5-2
ERR indicator LED, 1-7, 1-22
`Err in MDOC response`, hardware warning error, 6010, 6-23
error
HARDWARE NOT PRESENT, 4-57
error indication
clearing an, 1-7
error indicators
failure symptoms, 5-22
troubleshooting, 5-2
error message, 1-19–20
troubleshooting, 5-3
error messages
0001, diagnostics error, 6-2
0002, diagnostics error, 6-2
0003, diagnostics error, 6-2
0004, diagnostics error, 6-2
0005, diagnostics error, 6-3
0007, diagnostics error, 6-3
0008, diagnostics error, 6-3
0009, diagnostics error, 6-3
0010, diagnostics error, 6-3
0011, diagnostics error, 6-3
0012, diagnostics error, 6-4
0013, diagnostics error, 6-4
0014, diagnostics error, 6-4
0015, diagnostics error, 6-4
0020, diagnostics error, 6-4
0021, diagnostics error, 6-5
0022, diagnostics error, 6-5
0023, diagnostics error, 6-5
0024, diagnostics error, 6-5
0025, diagnostics error, 6-5
0026, diagnostics error, 6-5
0027, diagnostics error, 6-6
0028, diagnostics error, 6-6
0029, diagnostics error, 6-6
0030, diagnostics error, 6-6
0031, diagnostics error, 6-6
0032, diagnostics error, 6-6
0033, diagnostics error, 6-7
0034, diagnostics error, 6-7
0035, diagnostics error, 6-7
0036, diagnostics error, 6-7
0037, diagnostics error, 6-7
0038, diagnostics error, 6-7
0039, diagnostics error, 6-8
0040, diagnostics error, 6-8
0041, diagnostics error, 6-8
0042, diagnostics error, 6-8
0043, diagnostics error, 6-8
0044, diagnostics error, 6-9
0045, diagnostics error, 6-9
0046, diagnostics error, 6-9
0050, diagnostics error, 6-9
0051, diagnostics error, 6-9
0052, diagnostics error, 6-9
0053, diagnostics error, 6-10
0060, diagnostics error, 6-10
0061, diagnostics error, 6-10

0062, diagnostics error, 6-10
0063, diagnostics error, 6-10
0064, diagnostics error, 6-11
0065, diagnostics error, 6-11
0066, diagnostics error, 6-11
0067, diagnostics error, 6-11
0068, diagnostics error, 6-11
0069, diagnostics error, 6-11
0070, diagnostics error, 6-12
2000, operating error, 6-13
2001, operating error, 6-13
2002, operating error, 6-13
2003, operating error, 6-13
2004, operating error, 6-13
2005, operating error, 6-13
2006, operating error, 6-13
2007, operating error, 6-14
2008, operating error, 6-14
2009, operating error, 6-14
2010, operating error, 6-14
2011, operating error, 6-14
2012, operating error, 6-14
2013, operating error, 6-15
2014, operating error, 6-15
2015, operating error, 6-15
2016, operating error, 6-15
2018, operating error, 6-15
2019, operating error, 6-16
2020, operating error, 6-16
2021, operating error, 6-16
2022, operating error, 6-16
2023, operating error, 6-16
2024, operating error, 6-16
2025, operating error, 6-16
2026, operating error, 6-17
2027, operating error, 6-17
2028, operating error, 6-17
2029, operating error, 6-17
2030, operating error, 6-17
2031, operating error, 6-17
2032, operating error, 6-17
2033, operating error, 6-18
2034, operating error, 6-18
2035, operating error, 6-18
2036, operating error, 6-18
2037, operating error, 6-18
2038, operating error, 6-18
2039, operating error, 6-18
2040, operating error, 6-19
2041, operating error, 6-19
2042, operating error, 6-19
2043, operating error, 6-19
2044, operating error, 6-19
2045, operating error, 6-19
2046, operating error, 6-19
2047, operating error, 6-20
2048, operating error, 6-20
2049, operating error, 6-20
2050, operating error, 6-20
2051, operating error, 6-20
2052, operating error, 6-20
2053, operating error, 6-20
2054, operating error, 6-20
2055, operating error, 6-21
2056, operating error, 6-21
2057, operating error, 6-21
2058, operating error, 6-21
2059, operating error, 6-21
2060, operating error, 6-21
2802, operating error, 6-21
2803, operating error, 6-21
6000, hardware warning error, 6-22
6001, hardware warning error, 6-22
6002, hardware warning error, 6-22
6003, hardware warning error, 6-22
6004, hardware warning error, 6-22
6005, hardware warning error, 6-22
6006, hardware warning error, 6-22
6007, hardware warning error, 6-22
6008, hardware warning error, 6-23
6009, hardware warning error, 6-23
6010, hardware warning error, 6-23
6011, hardware warning error, 6-23
6012, hardware warning error, 6-23
6013, hardware warning error, 6-23
6014, hardware warning error, 6-23
6015, hardware warning error, 6-23
6016, hardware warning error, 6-24
6017, hardware warning error, 6-24
6018, hardware warning error, 6-24
6019, hardware warning error, 6-24
6802, hardware warning error, 6-24
6805, hardware warning error, 6-24
7000, hardware broken error, 6-25
7001, hardware broken error, 6-25
7002, hardware broken error, 6-25
7003, hardware broken error, 6-25
7004, hardware broken error, 6-25
7005, hardware broken error, 6-25
7006, hardware broken error, 6-25
7007, hardware broken error, 6-25
7008, hardware broken error, 6-25
7009, hardware broken error, 6-26
7010, hardware broken error, 6-26
7011, hardware broken error, 6-26
7012, hardware broken error, 6-26
7013, hardware broken error, 6-26
7014, hardware broken error, 6-27
7015, hardware broken error, 6-27
7016, hardware broken error, 6-27

7017, hardware broken error, 6-27
7018, hardware broken error, 6-27
7019, hardware broken error, 6-28
7020, hardware broken error, 6-28
7021, hardware broken error, 6-28
7022, hardware broken error, 6-28
7023, hardware broken error, 6-28
7024, hardware broken error, 6-29
7025, hardware broken error, 6-29
7026, hardware broken error, 6-29
7027, hardware broken error, 6-29
7028, hardware broken error, 6-29
7029, hardware broken error, 6-30
7030, hardware broken error, 6-30
7031, hardware broken error, 6-30
7032, hardware broken error, 6-30
7033, hardware broken error, 6-30
7034, hardware broken error, 6-30
7035, hardware broken error, 6-31
7036, hardware broken error, 6-31
7041, hardware broken error, 6-31
7042, hardware broken error, 6-31
7043, hardware broken error, 6-31
7044, hardware broken error, 6-32
7045, hardware broken error, 6-32
7046, hardware broken error, 6-32
7047, hardware broken error, 6-32
7048, hardware broken error, 6-32
7050, hardware broken error, 6-32
7073, hardware broken error, 6-33
7074, hardware broken error, 6-33
7075, hardware broken error, 6-33
7076, hardware broken error, 6-33
7077, hardware broken error, 6-33
7078, hardware broken error, 6-33
7079, hardware broken error, 6-33
7801, hardware broken error, 6-33
7802, hardware broken error, 6-33
7803, hardware broken error, 6-34
7804, hardware broken error, 6-34
7805, hardware broken error, 6-34
8000, computation error, 6-35
8001, computation error, 6-35
8002, computation error, 6-35
8003, computation error, 6-35
8004, computation error, 6-35
8005, computation error, 6-35
8006, computation error, 6-35
8999, computation error, 6-35
computation, 8000 – 8999, 6-35
factory-use only, 9000 – 9999, 6-36
hardware broken, 7000 – 7999, 6-25
hardware warning, 6000 – 6999, 6-22
not listed, 6-1
operating, 2000 – 2999, 6-13
remote retrival, 6-1
system diagnostics 0001 – 0070, 6-2
user application, 0001 – 0999, 6-2
with an asterisk (*), 6-2
Escape Characters, D-1
Example
Disable the (MENU) softkey., 1-25
Measure the calibrator signal., 1-11
Preset user-key menu., 1-23
Remove a user softkey., 1-25
Transfer an analyzer softkey to the user-key menu., 1-23
External-Mixer Function
bias, 4-24
BIAS ADJUST, 4-25
BIAS On Off, 4-25
BIAS PK MAX, 4-25
BIAS PK MIN, 4-26
BIAS PK RES, 4-26
BIAS PK START, 4-27
CONV LOSS, 4-47
ext mixer, 4-64
fulband KAQUVE, 4-69
fulband WFDGYJ, 4-69
LOCK HARMNC#, 4-89
LOCK H# On Off, 4-90
`External ref (100 MZ)`, hardware broken error, 7017, 6-27

F

factory-use only errors 9000 – 9999, 6-36
failure symptoms
abnormal screen display, 5-25
catastrophic, 5-22
current error indicator LED, 5-24
error indicators, 5-22
I/O check error indicator LED, 5-24
I/O or HP-MSIB indicator is on, 5-22
Volt/Temp error indicator LED, 5-23
FFS, 1-22
`FFS handshake`, hardware broken error, 7008, 6-25
`FFS is unlocked`, hardware broken error, 7010, 6-26
`FFS won't tune high`, hardware broken error, 7042, 6-31
`FFS won't tune high`, hardware warning error, 6004, 6-22
`FFS won't tune low`, hardware broken error, 7041, 6-31
`FFS won't tune low`, hardware warning error, 6003, 6-22
`FFS won't unlock`, hardware broken error, 7048, 6-32
fiber-optic

cables, C-1
fiber-optic cable
connections, 1-10
precautions, 1-10
fiber-optic connections, C-1
proper care of, C-1
fiber-optic connector
cleaning, 1-10
cleaning kit, 1-10
File already exists, operating error, 2052, 6-20
File not found, operating error, 2051, 6-20
Firmware Changed, hardware warning error, 6805, 6-24
First LO unleveled, hardware broken error, 7002, 6-25
Float pt overflow, computation error, 8001, 6-35
Float pt underflow, computation error, 8999, 6-35
FORMAT, 1-30
Freq, 1-11
Freq board adjust, hardware broken error, 7043, 6-31
freq reference, hardware warning error, 6016, 6-24
frequency
offset, 1-19–20
softkey menu, 2-2
span, setting the, 1-11
tuning equation, A-1
Frequency Function
BNKSTRT On Off, 4-28
CENTER, 4-36
CF STEP AutoMan, 4-38
FREQ OFFSET, 4-67
FRQ LIM On Off, 4-68
FULL SPAN, 4-70
LIMIT START, 4-85
SPAN, 4-152
START, 4-155
STOP, 4-158
front panel, 1-2
disabling front panel keys, 1-2
indicators, 1-21–22
keys, 1-2, 1-3
knob, 1-3–4
front panel operation
running System Diagnostics software, 5-14
functional summary
menu map, 2-1
function in progress, 1-19–20
functions
accessing instrument, 1-4
to execute, 1-2

G

Gain hardware error, hardware warning error, 6012, 6-23

H

hardware
broken errors 7000 – 7999, 6-25
warning errors 6000 – 6999, 6-22
hardware broken error
7000, ROM Check error, 6-25
7001, LO unleveled, 6-25
7002, First LO unleveled, 6-25
7003, Second LO unlocked, 6-25
7004, 300 MHz error, 6-25
7005, 321.4 MHz error, 6-25
7006, 21.4 MHz error, 6-25
7007, Cal error, 6-25
7008, FFS handshake, 6-25
7009, ROM 2 check error, 6-26
7010, FFS is unlocked, 6-26
7011, 125 KZ to FFS, 6-26
7012, Cannot lock YTO, 6-26
7013, Can't finetune YTO, 6-26
7014, 12.5 MZ to YTO LK BD, 6-27
7015, YTO unleveled, 6-27
7016, YTO is unlocked, 6-27
7017, External ref (100 MZ), 6-27
7018, 50 MZ to sampler, 6-27
7019, 300 MZ post fltr det, 6-28
7020, 300 MZ AGC, 6-28
7021, 600 MZ doubler level, 6-28
7022, Low idler range, 6-28
7023, High idler range, 6-28
7024, Tune DAC, 6-29
7025, Decade span atten, 6-29
7026, Binary span atten, 6-29
7027, Sweep dac, 6-29
7028, Correction dac, 6-29
7029, Video proc: 0 volt, 6-30
7030, Video proc: 2 volt, 6-30
7031, Idler is unlocked, 6-30
7032, Oven RF error, 6-30
7033, Power supply error, 6-30
7034, Dist amp A error, 6-30
7035, Dist amp B error, 6-31
7036, HP-MSIB error, 6-31
7041, FFS won't tune low, 6-31
7042, FFS won't tune high, 6-31
7043, Freq board adjust, 6-31
7044, YTO tuning range, 6-32
7045, 10 MHz out error, 6-32
7046, Illegal bandslct cde, 6-32
7047, RAM failure, 6-32
7048, FFS won't unlock, 6-32

7050, Hardware config fail, 6-32
7073, Tune+Span disconnect, 6-33
7074, Discriminator unlock, 6-33
7075, LOLA unleveled, 6-33
7076, MULT unleveled, 6-33
7077, YTF drive error, 6-33
7078, Tune/Span error, 6-33
7079, EEPROM check error, 6-33
7801, Optical atten failed, 6-33
7802, ADC error, 6-33
7803, Power meter failed, 6-34
7804, Self test failed, 6-34
7805, Zeroing error, 6-34
Hardware config fail, hardware broken error, 7050, 6-32
Hardware not present
error, 4-48
error, EXTVID command, 4-65
HARDWARE NOT PRESENT error, 4-57
Hardware not present, operating error, 2032, 6-17
hardware warning error
6000, EAROM unprotected, 6-22
6001, Confidence test passed, 6-22
6002, A6 RAM checksum (battery), 6-22
6003, FFS won't tune low, 6-22
6004, FFS won't tune high, 6-22
6005, Idler tuning range, 6-22
6006, YTO tuning range, 6-22
6007, MSIB NMAA received, 6-22
6008, Confidence test failed, 6-23
6009, No module label, 6-23
6010, Err in MDOC response, 6-23
6011, RBW hardware error, 6-23
6012, Gain hardware error, 6-23
6013, LOGAMP hardware error, 6-23
6014, PLL error, 6-23
6015, Oven cold, 6-23
6016, freq reference, 6-24
6017, 6214 GHz error, 6-24
6018, PGA gain sum high, 6-24
6019, PGA gain sum low, 6-24
6802, Invalid cal data, 6-24
6805, Firmware Changed, 6-24
High idler range, hardware broken error, 7023, 6-28
HOLD, 1-2, 1-3–4
horizontal gradicule, control display of annotation for, 4-80
horizontal graticule lines, control positioning of, 4-71
HP 70300A RF tracking generator
block diagram, A-11, A-12
inputs and outputs, B-1
module description, B-1
HP 70301A microwave tracking generator
block diagram, A-11, A-12
inputs and outputs, B-1
module description, B-1
HP 70310A precision frequency reference
block diagram, A-10
inputs and outputs, B-6
module description, B-6
HP 70600A preselector
block diagram, A-6
inputs and outputs, B-8
module description, B-8
HP 70601A preselector
block diagram, A-6
HP 70620A/B preamplifier
block diagram, A-6
inputs and outputs, B-10
module description, B-10
HP 70621A preamplifier
block diagram, A-6
inputs and outputs, B-10
module description, B-10
HP 70810B lightwave section
block diagram, A-8
calibration corrections, B-12
connector interface, B-12, B-14
fiber-optic tip, B-14
inputs and outputs, B-12
module description, B-12
optical power meter, B-12
patch cord, B-14
photodetector, B-12
preamplifier, B-12
stand-alone configuration, B-12
HP 70810B lightwave section Option 850
inputs and outputs, B-12
module description, B-12
HP 70900B local oscillator source
block diagram, A-10, A-12
inputs and outputs, B-15
module description, B-15
HP 70900B local oscillator source memory
program for reading from RAM memory, 5-18
program for writing to RAM memory, 5-18
HP 70902A IF section
block diagram, A-9
inputs and outputs, B-17
module description, B-17
HP 70903A IF section
block diagram, A-9
inputs and outputs, B-19
module description, B-19
HP 70904A RF section
block diagram, A-7

inputs and outputs, B-21
module description, B-21
HP 70905A/B RF section
block diagram, A-7
inputs and outputs, B-23
module description, B-23
HP 70906A/B RF section
block diagram, A-7
HP 70906A RF section
inputs and outputs, B-25
module description, B-25
HP 70907A/B external mixer interface module
inputs and outputs, B-27
module description, B-27
HP 70907A external mixer interface module
block diagram, A-6
HP 70908A RF section
block diagram, A-7
inputs and outputs, B-30
module description, B-30
HP 70909A RF section
inputs and outputs, B-31
module description, B-31
HP 70910A RF section
inputs and outputs, B-33
module description, B-33
HP-HIL, 1-3–4
HP-IB
indicators, 1-22
`HP-IB bus error`, operating error, 2045, 6-19
`HP-IB multiple cntlr`, operating error, 2036, 6-18
HP-MSIB, 1-7
indicator, 1-22
`HP-MSIB addr 70600`, diagnostics error, 0012, 6-4
`HP-MSIB addr 70700`, diagnostics error, 0015, 6-4
`HP-MSIB addr 70902`, diagnostics error, 0002, 6-2
`HP-MSIB addr 70903`, diagnostics error, 0003, 6-2
`HP-MSIB addr 70904`, diagnostics error, 0004, 6-2
`HP-MSIB addr 70905/6`, diagnostics error, 0005, 6-3
`HP-MSIB addr 70907`, diagnostics error, 0010, 6-3
HP-MSIB address
error message, source of, 6-1
`HP-MSIB error`, hardware broken error, 7036, 6-31
HP-MSIB troubleshooting
module removal method, 5-25, 5-26
HP-MSIB troubleshooting procedures
display troubleshooting utility, 5-25
HP-MSIB Troubleshooting Utility, 5-7

I

IDL, 1-22
`Idler is unlocked`, hardware broken error, 7031, 6-30
`Idler is unlocked`, operating error, 2028, 6-17
`Idler tuning range`, hardware warning error, 6005, 6-22
IF step gain, ability to control, 4-176
`Illegal bandslct cde`, hardware broken error, 7046, 6-32
`Illegal Cal signal`, operating error, 2023, 6-16
`Illegal character`, operating error, 2004, 6-13
`Illegal character set`, operating error, 2005, 6-13
`Illegal command`, operating error, 2001, 6-13
`Illegal HP-MSIB comm`, operating error, 2024, 6-16
`Illegal in bypass`, operating error, 2803, 6-21
`Illegal in LW mode`, operating error, 2802, 6-21
`Illegal marker type`, operating error, 2019, 6-16
`Illegal operation`, operating error, 2035, 6-18
`Illegal parameter`, operating error, 2002, 6-13
`Incorrect System`, diagnostics error, 0014, 6-4
index-matching compound
using, C-3–4
individual module
block diagram, A-12
individual system diagnostics utilities, 5-20
input attenuation
using, 1-13
input port
activating the, 1-8
inputs and outputs
HP 70300A RF tracking generator, B-1
HP 70301A microwave tracking generator, B-1
HP 70310A precision frequency reference, B-6
HP 70600A preselector, B-8
HP 70620A/B preamplifier, B-10
HP 70621A preamplifier, B-10

HP 70810B lightwave section, B-12
HP 70810B lightwave section Option 850, B-12
HP 70900B local oscillator source, B-15
HP 70902A IF section, B-17
HP 70903A IF section, B-19
HP 70904A RF section, B-21
HP 70905A/B RF section, B-23
HP 70906A RF section, B-25
HP 70907A/B external mixer interface module, B-27
HP 70908A RF section, B-30
HP 70909A RF section, B-31
HP 70910A RF section, B-33
INSTR, 1-3–4, 1-7
INSTR PRESET, 1-3, 1-7, 1-11
instrument
control behavior, receiver or spectrum analyzer, 4-176
instrument functions, 1-3
Instrument-State Function
CONFIG, 4-44
EXTEND STATE, 4-63
NEXT PAGE, 4-102
NO. OF STATES, 4-104
POWERON IP/LAST, 4-112
preamp control, 4-113
PREAMP N On Off, 4-113
preset adc, 4-119
preset input, 4-119
P STATE On Off, 4-120
RECALL STATE, 4-128
RECALL USERKEY, 4-130
SAVE STATE, 4-141
SAVE USERKEY, 4-143
show states, 4-147
STATE, 4-155
TRACE PRESET, 4-167
instrument-state softkey menu, 2-7
instrument-state softkey menus, 2-8
`Integer overflow`, computation error, 8004, 6-35
INTEN ADJUST, 1-26
INT/EXT softkey, 1-2
`Invalid cal data`, hardware warning error, 6802, 6-24
I/O CHECK indicator, 1-22
`Item not found`, operating error, 2013, 6-15

K

key
organization of MENU keys, 2-1
keyboard
HP-HIL, 1-4
keypad
instrument, 1-3–4, **1-5**, 1-11
numeric, 1-2, 1-3–4, 1-13

L

`Label too long`, operating error, 2016, 6-15
`LC bandwidths`, diagnostics error, 0022, 6-5
`LC board`, diagnostics error, 0032, 6-6
LCL, 1-2, 1-3
LG, LN, and DETSEL, control coupling between, 4-48
Lightwave Function
LAMBDA, 4-81
LW MODE OptElec, 4-93
RSPSVTY AutoMan, 4-138
lightwave signal analyzer, B-12
annotation, 1-17–18
basic block diagram, A-2
individual module block diagrams, A-6–12
servicing, 5-9
theory of operation, A-2
using Operation Verification software, 5-8
using system diagnostics software, 5-7
Limit-Line Function
AMPTD VALUE, 4-17
BEEPER On Off, 4-24
BLANK TRACES, 4-28
CONFIRM DELETE, 4-45
DELETE ALL, 4-53
DELETE SEGMENT, 4-54
edit limit, 4-59
enter limit, 4-60
FREQ VALUE, 4-68
LAST SEGMENT, 4-82
LIMITS On Off, 4-85
NEXT SEGMENT, 4-104
RECALL LIMIT, 4-127
RELATIV On Off, 4-132
SAVE LIMIT, 4-140
TYPE, 4-171
UPPER/LOWER, 4-173
`LINEAR not allowed`, operating error, 2043, 6-19
loading system diagnostics program into RAM, 5-20, 5-21
`LOGAMP hardware error`, hardware warning error, 6013, 6-23
`Log amplifier`, diagnostics error, 0029, 6-6
`Log amplifier`, diagnostics error, 0039, 6-8
`Log board`, diagnostics error, 0033, 6-7
`Log of negative`, computation error, 8003, 6-35
`Log of zero`, computation error, 8002, 6-35
`LOLA unleveled`, hardware broken error, 7075, 6-33
LOOP UNLOCK indicators, 1-22

LO unleveled, hardware broken error, 7001, 6-25
Low/high band switch, diagnostics error, 0044, 6-9
Low idler range, hardware broken error, 7022, 6-28
LSN indicator, 1-22

M

mainframe status indicators
  troubleshooting, 5-3
manual organization, vi
manual responsivity indicator, 1-17–18
marker, 1-14–15
  activating the, 1-12
  amplitude, 1-14–15
  frequency, 1-14–15
  number, 1-14–15
Marker Function
  1/T, 4-1
  ACTIVE MARKER, 4-4
  -> CF, 4-37
  -> CF STEP, 4-37
  CLOSE PIT, 4-41
  CLOSEST PEAK, 4-42
  DELTA, 4-55
  FREQ, 4-66
  HIGHEST PEAK, 4-72
  LEFT PEAK, 4-83
  LEFT PIT, 4-84
  marker excursn, 4-94
  marker readout, 4-94
  MINIMUM PEAK, 4-96
  MINIMUM POINT, 4-96
  MIN PIT, 4-97
  MIN POINT, 4-97
  MKNOISE On Off, 4-98
  MKPAUSE On Off, 4-98
  MKR BW On Off, 4-99
  mkr bw/zoom bw, 4-99
  MKR NRM On Off, 4-100
  MK STOP On Off, 4-100
  MRK TRA A B C, 4-101
  NEXT MIN PK, 4-102
  NEXT PEAK, 4-103
  NEXT PIT, 4-103
  PEAK EXCURSN, 4-108
  PERIOD, 4-109
  PIT EXCURSN, 4-110
  pit,min markers, 4-110
  READ AutoMan, 4-126
  -> REF, 4-130
  REL LEFT, 4-132
  REL PWR On Off, 4-133
  REL RIGHT, 4-133
  RIGHT PEAK, 4-136
  RIGHT PIT, 4-137
  RIN SYS On Off, 4-137
  SIG TRK LIMIT, 4-150
  SIG TRK On Off, 4-150
  SWPTIME, 4-161
  Δ -> SP, 4-172
  WAVELEN, 4-182
  X, 4-182
  ZOOM TO RES BW, 4-184
marker softkey menu, 2-4
Math and Move Function
  linear math, A◀A*DL/(A+B), 4-7
  linear math, A◀A*DL/(A+B+C), 4-7
  linear math, A◀A*DL/B), 4-8
  linear math, A◀A*DL/C), 4-8
  linear math, A◀DL*(A+B)/C), 4-12
  linear math, trace linmath, 4-166
  log math, A◀A–B, 4-9
  log math, A◀A–B+DL, 4-9
  log math, A◀(A–B)–C, 4-10
  log math, A◀(A–B)–C+DL, 4-10
  log math, A◀A–C, 4-11
  log math, A◀A–C+DL, 4-11
  log math, trace logmath, 4-166
  one shot math, A<-A+B, 4-2
  one shot math, A XCH B, 4-22
  one shot math, A XCH C, 4-23
  one shot math, B<-B-DL, 4-23
  one shot math, B XCH C, 4-29
  one shot math, C<-B, 4-36
  oneshot math, oneshot math, 4-106
MEASURE indicator LED, 1-7, 1-22
measuring
  a calibrator signal, 1-11–12
  closely spaced signals, 1-13
  low level signals, 1-13
memory card, 1-3–4, 1-28–30
  battery, 1-29, 1-30
  battery replacement, 1-29
  formatting, 1-30
  insertion, 1-29
  new, 1-30
  power requirement, 1-29
  specifying the location of the, 1-30
  using the HP 70004A color display, 1-29
Memory overflow, operating error, 2011, 6-14

Memory-Related Function
CANCEL, 4-33
catalog && MSI, 4-34
CHANGE PREFIX, 4-38
CONFIRM ERASE, 4-45
execute DLP, 4-62
FORMAT, 4-66
HPIB DISK, 4-74
HP-MSIB CARD, 4-75
INTRNL MEMORY, 4-79
key control, 4-80
LOAD FILE, 4-88
NEXT PAGE, 4-102
PARTIAL ERASE, 4-107
PURGE FILE, 4-121
recall, 4-126
recall from . . . , 4-127
RECALL LIMIT, 4-127
RECALL MEMORY, 4-128
RECALL TRACE A, 4-129
RECALL USER, 4-129
RECALL USERKEY, 4-130
save, 4-140
SAVE LIMIT, 4-140
SAVE MEMORY, 4-141
SAVE STATE, 4-141
save to . . . , 4-142
SAVE TRACE A, 4-142
SAVE USERKEY, 4-143
MENU, 1-2, 1-3–4, 1-6
MENU hardkey
amplitude softkey menu, 2-3
bandwidth softkey menu, 2-5
frequency softkey menu, 2-2
instrument-state softkey menu, 2-7
marker softkey menu, 2-4
miscellaneous softkey menu, 2-12
organization of softkeys, 2-1
sweep time softkey menu, 2-5
trace softkey menu, 2-6
Menu Key, Function Type, Preset State
1/T, (marker), Off, 4-1
3-DIMEN On Off, (active-trace processing), Off, 4-1
66 MODE On Off, (programming-related and service-related), Off, Not affected by (IP)., 4-2
A<-A+B, (active-trace processing), Off, 4-2
A-B->A On Off, (active-trace processing), Off, 4-3
A-B+DL On Off, (active-trace processing), Off, 4-3
A-C ->A On Off, (tracking generator), Off, 4-4
ACTIVE MARKER, (marker), Off, 4-4
ALC ALT, (tracking generator), Off, 4-5
ALC EXT, (tracking generator), Off, 4-5
ALC NRM, (tracking generator), On, 4-6
alc/track, (tracking generator), Not affected by (IP)., 4-6
A◀A*DL/(A+B), (active-trace processing), Off, 4-7
A◀A*DL/(A+B+C), (active-trace processing), Off, 4-7
A◀A*DL/B), (active-trace processing), Off, 4-8
A◀A*DL/C), (active-trace processing), Off, 4-8
A◀A–B, (active-trace processing), Off, 4-9
A◀A–B+DL, (active-trace processing), Off, 4-9
A◀(A–B)–C, (active-trace processing), Off, 4-10
A◀(A–B)–C+DL, (active-trace processing), Off, 4-10
A◀A–C, (active-trace processing), Off, 4-11
A◀A–C+DL, (active-trace processing), Off, 4-11
A◀DL*(A+B)/C), (active-trace processing), Off, 4-12
A METER On Off, (amplitude), Off, 4-12
AM FREQ, (tracking generator), 1 kHz or hardware limit., 4-13
AM INT EXT, (tracking generator), INT, 4-13
AM % On Off, (tracking generator), Off at 0 Hz, 4-14
AMPCOR -> LOWER, (amplitude-correction), Off, 4-14
AMPCOR On Off, (amplitude), Off, 4-15
AMPCOR -> UPPER, (amplitude-correction), Off, 4-16
AMP REF OFFSET, (amplitude), 0 dB, 4-17
AMPTD VALUE, (limit-line), Off, 4-17
ANALYZR TEST, (service-related), Off, 4-17
ANOTATN On Off, (display), On, 4-18
ANY CHR, (programming-related), Off, 4-18
ATTEN AutoMan, (amplitude), Auto, 10 dB for spectrum analyzer, but is dependent on lightwave system and module flatness., 4-20
A UNITS AutoMan, (amplitude), Auto, 4-20
AUTZERO On Off, (power-meter), On, 4-21
AVERAGE SHRT->C, (tracking generator), Off, 4-22

A XCH B, (active-trace processing), Off, 4-22
A XCH C, (active-trace processing), Off, 4-23
B<-B-DL, (active-trace processing), Off, 4-23
BEEPER On Off, (limit-line), Off, 4-24
BIAS ADJUST, (external-mixer), 0 Amperes, 4-25
bias, (external-mixer), Not affected by (IP)., 4-24
BIAS On Off, (external-mixer), Off, 4-25
BIAS PK MAX, (external-mixer), Hardware dependent., 4-26
BIAS PK MIN, (external-mixer), Hardware dependent., 4-26
BIAS PK RES, (external-mixer), 10 points, 4-26
BIAS PK START, (external-mixer), Off, 4-27
BLANKNG On Off, (tracking generator), Off, 4-27
BLANK TRACES, (limit-line), Off, 4-28
BLOB On Off, (service-related), Off, 4-28
BNKSTRT On Off, (frequency), Off, 4-29
B XCH C, (active-trace processing), Off, 4-29
CAL ALL, (calibration), Interrupted, 4-30
cal enable, (calibration), Not affected by (IP)., 4-30
CAL GAIN, (calibration), Interrupted, 4-31
CAL LOGAMP, (calibration), Interrupted, 4-31
cal menu, (calibration), Not affected by (IP)., 4-32
CAL RES BW, (calibration), Interrupted, 4-32
CAL SRC INT EXT, (calibration), Depends on `preset input` setting., 4-32
cal src values, (calibration), Not affected by (IP)., 4-33
CAL VID BW, (calibration), Interrupted, 4-33
CANCEL, (service-related and memory-related), Off, 4-33
catalog && MSI, (user-defined and memory-related), Not affected by (IP)., 4-35
C<-B, (active-trace processing), Off, 4-36
CENTER DELTA, (preselector), 0 Hz, 4-36
CENTER, (frequency), Hardware dependent., 4-36
-> CF, (marker), Markers off., 4-37
CF STEP AutoMan, (frequency), Set to SPAN/10, 4-38
-> CF STEP, (marker), Markers off., 4-37
CHANGE PREFIX, (memory-related), Last prefix., 4-39
CLEAR TO END, (programming-related and display), Off, 4-39
CLEAR WRT A, (active-trace processing), On, 4-39
CLEAR WRT B, (active-trace processing), Off, 4-40
CLEAR WRT C, (active-trace processing), Off, 4-40
C ◀ DAC SEARCH, (preselector), Off, 4-41
CLOSE PIT, (marker), Off, 4-41
CLOSEST PEAK, (marker), Off, 4-42
COMMAND, (programming-related), Off, 4-44
CONFIG, (instrument-state), Off, 4-44
CONFIRM DELETE, (limit-line), On, 4-45
CONFIRM ERASE, (memory-related), On, 4-45
CONFIRM RESTART, (service-related), On, 4-46
CONT, (programming-related), On, 4-46
CONT SWEEP, (sweep and trigger), On, 4-46
CONV LOSS, (external-mixer), Depends on `preset input` setting., 4-47
COUPLNG AC DC, (signal-path), Depends on hardware and `preset input`., 4-47
CPL AVG On Off, (amplitude), On, 4-48
CPL DET On Off, (signal-detection), On, 4-48
dBm, (amplitude), On, 4-49
dBμV, (amplitude), Not affected by (IP)., 4-49
dBmV, (amplitude), Not affected by (IP)., 4-50
DEBUG FAST, (programming-related), On, 4-51
DEBUG On Off, (programming-related), Off, 4-51
debug, (programming-related), Not affected by (IP)., 4-50
DEBUG SLOW, (programming-related), Off, 4-52
DEFINE USR KEY, (user-defined), Definition process interrupted., 4-52
DELETE ALL, (limit-line), Off, 4-53
DELETE CHAR, (programming-related and display), Off, 4-53
DELETE or . . . , (programming-related and display), Off, 4-54
DELETE SEGMENT, (limit-line), Off, 4-55
DELTA, (marker), Off, 4-55

DETECTR AutoMan, (signal-detection), Auto, 4-56
DETECTR GND AUT, (service-related), AUT, 4-56
detectr, (signal-detection), Not affected by (IP)., 4-55
DET SEL LOG V, (signal-detection), LOG, 4-57
DISPOSE USER, (user-defined), Off, 4-57
DSP LIN On Off, (display), Off at 0 dBm., 4-58
EDIT FUNCDEF, (user-defined and programming-related), Off, 4-59
edit limit, (limit-line), Not affected by (IP)., 4-59
ENTER COMMAND, (programming-related), Off, 4-59
enter limit, (limit-line), Not affected by (IP)., 4-60
ENTER LINE, (display), Off, 4-60
ERASE ALL, (service-related), Not affected by (IP)., 4-61
erase/restart, (service-related), Not affected by (IP)., 4-61
execute DLP, (user-defined, programming-related, and memory-related), Not affected by (IP)., 4-62
EXTEND STATE, (instrument-state), Off, 4-63
EXT IF On Off, (signal-path), Off, 4-64
ext mixer, (external-mixer), Not affected by (IP)., 4-64
EXT, (sweep and trigger), Off, 4-62
EXT VID FM IQ, (signal-path), FM, 4-65
FLATCAL On Off, (calibration), On, 4-65
FORMAT, (memory-related), Off, 4-66
FREQ FOR CAL, (calibration), Depends on `preset input` setting., 4-67
FREQ, (marker), On, 4-66
FREQ OFFSET, (frequency), 0 Hz, 4-67
FREQ VALUE, (limit-line), Off, 4-68
FRQ LIM On Off, (frequency), On (HP 70908A RF section Only!)., 4-68
fulband KAQUVE, (external-mixer), Hardware dependent., 4-69
fulband WFDGYJ, (external-mixer), Hardware dependent., 4-70
FULL SPAN, (frequency), On, 4-70
GAINCAL On Off, (calibration), On, 4-70
grat control, (display), Not affected by (IP)., 4-71
GRAT On Off, (display), On, 4-71
GRATSCR On Off, (display), Off, 4-72
GROUND, (signal-detection), Off, 4-72
HIGHEST PEAK, (marker), Markers off., 4-73
HOLD, (display), On, 4-73
HORZ OFFSET, (active-trace processing), Off, 4-74
HPIB DISK, (memory-related), Not affected by (IP)., 4-74
HP-MSIB CARD, (memory-related), Not affected by (IP)., 4-75
HYS LEVEL, (sweep and trigger), 3 dB, 4-76
IMAGE N START, (signal-identification), 1, 4-76
IMAGE N STOP, (signal-identification), 40, 4-77
IMAGE SHIFT, (signal-identification), Shift if hardware supports it., 4-78
IN 1 70908A, (signal-path), Hardware dependent., 4-146
IN 1 LW 70810A, (signal-path), Hardware dependent., 4-146
INPUT IMPED, (amplitude), 50 Ω, 4-78
INSERT or . . . , (programming-related and display), Off, 4-79
INTRNL MEMORY, (memory-related), Not affected by (IP)., 4-80
key control, (user-defined and memory-related), Not affected by (IP)., 4-80
LABEL Y On Off, (display), Off, 4-81
LAMBDA, (lightwave), 1300 nm is selected for standard HP 70810B lightwave section, 850 nm is selected for HP 70810B Option 850 lightwave section., 4-81
LAST SEGMENT, (limit-line), Off, 4-82
LCL OSC START, (service-related), Set to lowest frequency allowed by hardware., 4-82
LCL OSC STOP, (service-related), Set to highest frequency allowed by hardware., 4-83
LEFT PEAK, (marker), Markers off., 4-83
LEFT PIT, (marker), Off, 4-84
lim &<-> ampcor, (amplitude-correction), Not affected by (IP)., 4-84
LIMITS On Off, (limit-line), Off, 4-85
LIMIT START, (frequency), Off, 4-86
LINEAR, (amplitude), Off, 4-86
LINEAR Vlt Pwr, (amplitude), Off, 4-87
LINES On Off, (active-trace processing), On, 4-87
LINE, (sweep and trigger), Off, 4-86
LOAD FILE, (memory-related), Off, 4-88
LOCK HARMNC#, (external-mixer), 0, 4-89

LOCK H# On Off, (external-mixer), Off, 4-90
LOCKOUT ANOTATN, (display), Off, 4-90
LOG CAL On Off, (calibration), On, 4-91
LOG dB/DIV, (amplitude), 10 dB for spectrum analyzer and 5 dB for lightwave., 4-91
log/lin detectr, (signal-detection), Not affected by (IP)., 4-92
LOWER-> AMPCOR, (amplitude-correction), Off, 4-92
LW MODE OptElec, (lightwave), Optical annotation selected., 4-93
marker excursn, (marker), Not affected by (IP)., 4-94
marker readout, (marker), Not affected by (IP)., 4-94
MAX HOLD A, (active-trace processing), Off, 4-95
MAX HOLD B, (active-trace processing), Off, 4-95
MAX HOLD C, (active-trace processing), Off, 4-95
MAX IN AutoMan, (amplitude), Auto, 0 dBm, 4-95
MAX MXR LEVEL, (amplitude), −10 dBm, 4-95
MIN HOLD A, (active-trace processing), Off, 4-96
MIN HOLD B, (active-trace processing), Off, 4-96
MIN HOLD C, (active-trace processing), Off, 4-96
MINIMUM PEAK, (marker), Off, 4-96
MINIMUM POINT, (marker), Off, 4-97
MIN PIT, (marker), Off, 4-97
MIN POINT, (marker), Off, 4-97
MKNOISE On Off, (marker), Off, 4-98
MKPAUSE On Off, (marker), Off, 4-98
MKR BW On Off, (marker), Off, 4-99
mkr bw/zoom bw, (marker), Not affected by (IP)., 4-99
MKR NRM On Off, (marker), Off, 4-100
MK STOP On Off, (marker), Off, 4-100
modultn, (tracking generator), Not affected by (IP)., 4-101
MRK TRA A B C, (marker), Trace A selected, Trace B and C off., 4-101
NEG PK, (signal-detection), Off, 4-102
NEXT MIN PK, (marker), Off, 4-102
NEXT PAGE, (instrument-state and memory-related), Off, 4-102
NEXT PEAK, (marker), Markers off., 4-103
NEXT PIT, (marker), Off, 4-103
NEXT SEGMENT, (limit-line), Off, 4-104
NOISE ON OFF, (power-meter), Off, 4-105
NO. OF STATES, (instrument-state), Not affected by (IP)., 4-104
NORMAL, (signal-detection), On, 4-106
oneshot math, (active-trace processing), Not affected by (IP)., 4-106
OVERSWP On Off, (sweep and trigger), Off, 4-106
PARTIAL ERASE, (memory-related), Not affected by (IP)., 4-107
PATHLOK On Off, (signal-path), Off, 4-107
PAUSE, (programming-related), Off, 4-108
PEAK EXCURSN, (marker), 6 dB, 4-108
PERIOD, (marker), Off, 4-109
PERSIST On Off, (active-trace processing), Off, 4-109
PIT EXCURSN, (marker), Off, 4-110
pit,min markers, (marker), Not affected by (IP)., 4-110
POS PK, (signal-detection), Off, 4-111
POWER FOR CAL, (calibration), Depends on preset input setting., 4-112
power meter, (power-meter), Not affected by (IP)., 4-112
POWERON IP/LAST, (instrument-state), Not affected by (IP)., 4-113
power, (tracking generator), Not affected by (IP)., 4-111
preamp control, (instrument-state), Hardware dependent., 4-113
PREAMP N On Off, (instrument-state), Hardware dependent., 4-113
presel center, (preselector), Not affected by (IP)., 4-114
PRESEL CENTER, (preselector), Off, 4-114
PRESEL DAC, (preselector), Set to midrange of DAC values., 4-115
pre-select, (preselector), Not affected by (IP)., 4-115
PRESEL HYS, (preselector), Off, 4-116
PRESEL On Off, (preselector), On, but hardware dependent., 4-117
PRESEL PARTIAL, (preselector), Off, 4-117
PRESEL PEAK, (preselector), Off, 4-118
preset adc, (instrument-state), Not affected by (IP)., 4-119
preset input, (instrument-state), Not affected by (IP)., 4-119
PRESET USER, (user-defined), Not affected by (IP)., 4-120
P STATE On Off, (instrument-state), Not affected by (IP)., 4-120
PURGE FILE, (memory-related), Off, 4-121

PWR AVG On Off, (power-meter), Off, 4-121
PWR BAR On Off, (power-meter), Off, 4-122
PWR MTR OptElec, (power-meter), Elec, 4-122
PWR STP AutoMan, (tracking generator), Auto, 4-123
PWR SWP On Off, (tracking generator), Off, 4-124
RB/SPAN RATIO, (bandwidth), 0.010, 4-124
RBW AMP On Off, (calibration), On, 4-125
RBW FREQ On Off, (calibration), On, 4-125
READ AutoMan, (marker), Auto, 4-126
recall from ... , (memory-related), Not affected by (IP)., 4-127
RECALL LIMIT, (memory-related and limit-line), Off, 4-127
RECALL MEMORY, (memory-related), Off, 4-128
recall, (memory-related), Not affected by (IP)., 4-126
RECALL STATE, (instrument-state), Off, 4-128
RECALL TRACE A, (memory-related), Off, 4-129
RECALL USERKEY, (memory-related and instrument-state), Off, 4-130
RECALL USER, (user-defined and memory-related), Off, 4-129
REF LVL, (amplitude), −10 dBm for spectrum analyzer and 0 dBm for lightwave., 4-131
REF LVL POSN, (amplitude), At top of 10th division., 4-131
-> REF, (marker), Markers Off., 4-130
RELATIV On Off, (limit-line), Off, 4-132
REL LEFT, (marker), Markers off., 4-132
REL PWR On Off, (marker), Off, 4-133
REL RIGHT, (marker), Markers off., 4-134
REPLACE or ... , (programming-related and display), Off, 4-134
RES BW AutoMan, (bandwidth), Auto, 4-135
RESTART, (service-related), Off, 4-136
RIGHT PEAK, (marker), Markers off., 4-136
RIGHT PIT, (marker), Off, 4-137
RIN SYS On Off, (marker), Off, 4-138
ROM VERSION, (service-related), Not affected by (IP)., 4-138
RSPSVTY AutoMan, (lightwave), Auto, 4-139
SAMPLE, (signal-detection), Off, 4-140
SAVE LIMIT, (memory-related and limit-line), Off, 4-141
SAVE MEMORY, (memory-related), Off, 4-141
save, (memory-related), Not affected by (IP)., 4-140
SAVE STATE, (memory-related and instrument-state), Off, 4-142
save to ... , (memory-related), Not affected by (IP)., 4-142
SAVE TRACE A, (memory-related), Off, 4-142
SAVE USERKEY, (memory-related and instrument-state), Off, 4-144
SAVE USER, (user-defined), Off, 4-143
select adc, (signal-path), Not affected by (IP)., 4-144
SELECT CHAR, (programming-related and display), Off, 4-145
select input, (signal-path), Not affected by (IP)., 4-146
SERVICE REQUEST, (service-related), Off, 4-146
show states, (instrument-state), Not affected by (IP)., 4-147
SIG ID AMPTD Δ, (signal-identification), 10 dB for spectrum analayzer, but not available in optical mode., 4-147
SIG ID -> CF, (signal-identification), Off for spectrum analyzer, but not available in optical mode., 4-148
SIG ID MAN OFF, (signal-identification), Off for spectrum analyzer, but not available in optical mode., 4-148
sig id options, (signal-identification), Not affected by (IP)., 4-149
SIGNAL IDENT, (signal-identification), Off for spectrum analyzer, but not available in optical mode., 4-149
SIG TRK LIMIT, (marker), 5 dB, 4-150
SIG TRK On Off, (marker), Off for spectrum analyzer, but not available in optical mode., 4-150
SINGLE SWEEP, (sweep and trigger), Off, 4-151
SPACE, (programming-related and display), Off, 4-151
SPAN, (frequency), Set to maximum measurement range., 4-152
SRC ATN AutoMan, (tracking generator), Auto, 4-153
SRC OSC INT EXT, (tracking generator), INT, 4-153
SRC PWR OFFSET, (tracking generator), 0 dB, 4-154

SRC PWR On Off, (tracking generator), Off, 4-155
START, (frequency), Set to beginning of measurement range., 4-155
STATE, (instrument-state), On, 4-156
STEP, (programming-related), Off, 4-156
STM RSP MIL Cpl, (tracking generator), Off, 4-157
STM RSP On Off, (tracking generator), Off, 4-157
STOP, (frequency), Set to end of measurement range., 4-158
STORE A, (active-trace processing), Off, 4-158
STORE OPEN ->C, (tracking generator), Off, 4-159
STORE THRU->B, (tracking generator), Off, 4-160
STP GAIN AutoMan, (amplitude), Auto, 4-161
SWPTIME AutoMan, (sweep and trigger), Auto, 4-162
SWPTIME, (marker), Off, 4-161
SYS COR AutoOff, (calibration), Auto, 4-163
THRESHD On Off, (display), Off, at −90 dBm., 4-163
TITLE, (display), Blanks title., 4-165
trace A B C, (active-trace processing), A, 4-165
TRACE LENGTH, (active-trace processing), Off, 4-165
trace linmath, (active-trace processing), Not affected by (IP)., 4-166
trace logmath, (active-trace processing), Not affected by (IP)., 4-166
trace norm, (tracking generator), Not affected by (IP)., 4-166
TRACE PRESET, (instrument-state), Executed, 4-167
track gen, (tracking generator), Not affected by (IP)., 4-167
TRACKNG ADJUST, (tracking generator), Off, 4-168
TRACKNG PEAK, (tracking generator), Off, 4-169
TRIGGER DELAY, (bandwidth), 0, 4-170
TRIGGER FREE, (sweep and trigger), On, 4-171
TYPE, (limit-line), Off, 4-171
Δ -> SP, (marker), Markers off., 4-172
units menu, (amplitude), Not affected by (IP)., 4-172
UPPER-> AMPCOR, (amplitude-correction), Off, 4-173
UPPER/LOWER, (limit-line), Upper, 4-174
USR PWR On Off, (power-meter), Off, 4-175
VBW AMP On Off, (calibration), On, 4-175
VBW CPL Rx SA, (bandwidth), SA, 4-176
VBW/RBW RATIO, (bandwidth), 1, 4-176
VERT OFFSET, (active-trace processing), Off, 4-177
VID AVG On Off, (active-trace processing), Off, 100, 4-178
VID BW AutoMan, (bandwidth), Auto, 4-178
VIDEO LEVEL, (sweep and trigger), −100 dBm, 4-179
VIDEO, (sweep and trigger), Off, 4-179
VID LIN On Off, (bandwidth), Off, 4-180
VIEW A/BLANK A, (active-trace processing), CLEAR WRT A, 4-181
VIEW B/BLANK B, (active-trace processing), BLANK B, 4-181
VIEW C/BLANK C, (active-trace processing), BLANK C, 4-181
VOLT, (amplitude), Off, 4-181
WARNING On Off, (service-related), On, 4-181
WATT, (amplitude), Off, 4-182
WAVELEN, (marker), Off, 4-182
X, (marker), Off, 4-183
ZERO, (power-meter), Off, 4-183
ZOOM TO RES BW, (marker), Off, 4-184
MENU keys
organization of, 1-6
menu map summary, 2-1
message area, 1-19–20
miscellaneous softkey menu, 2-12
`Missing parameter`, operating error, 2003, 6-13
`Missing terminator`, operating error, 2007, 6-14
modular lightwave signal analyzer
system overview, A-4
modular lightwave signal analyzer system
block diagram, A-4
installing modules, A-4
modular source
system overview, A-5
modular spectrum analyzer
system overview, A-4
modular spectrum analyzer system
block diagram, A-4
installing modules, A-4
module description
HP 70300A RF tracking generator, B-1
HP 70301A microwave tracking generator, B-1

HP 70310A precision frequency reference, B-6
HP 70600A preselector, B-8
HP 70620A/B preamplifier, B-10
HP 70621A preamplifier, B-10
HP 70810B lightwave section, B-12
HP 70810B lightwave section Option 850, B-12
HP 70900B local oscillator source, B-15
HP 70902A IF section, B-17
HP 70903A IF section, B-19
HP 70904A RF section, B-21
HP 70905A/B RF section, B-23
HP 70906A RF section, B-25
HP 70907A/B external mixer interface module, B-27
HP 70908A RF section, B-30
HP 70909A RF section, B-31
HP 70910A RF section, B-33
`Modulus of zero`, computation error, 8006, 6-35
`MSIB NMAA received`, hardware warning error, 6007, 6-22
`MULT unleveled`, hardware broken error, 7076, 6-33

N

`New 70810 ROMs req`, operating error, 2060, 6-21
NEXT INSTR, 1-7, 1-26
`No active marker`, operating error, 2020, 6-16
`No DAC in this band`, operating error, 2046, 6-19
`No EMIM Section?`, diagnostics error, 0011, 6-3
`No errors`, operating error, 2000, 6-13
`NO I.F. SECTION?`, diagnostics error, 0009, 6-3
`No instr resp`, operating error, 2037, 6-18
`NO LO?`, diagnostics error, 0001, 6-2
`No module label`, hardware warning error, 6009, 6-23
`No PRESELECTOR?`, diagnostics error, 0013, 6-4
`NO RF SECTION?`, diagnostics error, 0008, 6-3
NORMAL, 1-12
`Not stored, A–X->A on`, operating error, 2042, 6-19
`Not stored: open 1st`, operating error, 2044, 6-19

O

On Off softkey, 1-2
operating error
2000, `No errors`, 6-13
2001, `Illegal command`, 6-13
2002, `Illegal parameter`, 6-13
2003, `Missing parameter`, 6-13
2004, `Illegal character`, 6-13
2005, `Illegal character set`, 6-13
2006, `Parm out of range`, 6-13
2007, `Missing terminator`, 6-14
2008, `Output unleveled`, 6-14
2009, `Protocol error`, 6-14
2010, `Cmd out of sequence`, 6-14
2011, `A Hardware Selected`, 6-14
2011, `Memory overflow`, 6-14
2012, `B Hardware Selected`, 6-14
2013, `Item not found`, 6-15
2014, `Duplicate identifier`, 6-15
2015, `Too many entries`, 6-15
2016, `Label too long`, 6-15
2018, `State protected`, 6-15
2019, `Illegal marker type`, 6-16
2020, `No active marker`, 6-16
2021, `Bad IF/ENDIF nesting`, 6-16
2022, `REPEAT/UNTIL error`, 6-16
2023, `Illegal Cal signal`, 6-16
2024, `Illegal HP-MSIB comm`, 6-16
2025, `System error (slave)`, 6-16
2026, `Check mixer bias`, 6-17
2027, `Service mode -- do IP`, 6-17
2028, `Idler is unlocked`, 6-17
2029, `Command syntax error`, 6-17
2030, `Scaling overflow`, 6-17
2031, `Too many errors`, 6-17
2032, `Hardware not present`, 6-17
2033, `Single band only`, 6-18
2034, `Test switch on`, 6-18
2035, `Illegal operation`, 6-18
2036, `HP-IB multiple cntlr`, 6-18
2037, `No instr resp`, 6-18
2038, `Span÷trace too large`, 6-18
2039, `User stack overflow`, 6-18
2040, `Partial USTATE data`, 6-19
2041, `CAL POWER lvl err`, 6-19
2042, `Not stored, A–X->A on`, 6-19
2043, `LINEAR not allowed`, 6-19
2044, `Not stored: open 1st`, 6-19
2045, `HP-IB bus error`, 6-19
2046, `No DAC in this band`, 6-19
2047, `Preselector disabled`, 6-20
2048, `Userdef protected`, 6-20
2049, `Battery failed`, 6-20
2050, `Ampcr/span too large`, 6-20
2051, `File not found`, 6-20

2052, File already exists, 6-20
2053, storage device, 6-20
2054, write protect, 6-20
2055, bad file, 6-21
2056, bad revision, 6-21
2057, volume full, 6-21
2058, bad volume, 6-21
2059, directory full, 6-21
2060, New 70810 ROMs req, 6-21
2802, Illegal in LW mode, 6-21
2803, Illegal in bypass, 6-21
operating errors 2000 – 2999, 6-13
Operation Verification, 5-7
testing a lightwave signal analyzer, 5-8
Optical atten failed, hardware broken error, 7801, 6-33
optical connector
cleaning, C-2–4
cleaning kit, C-1, C-2
fiber-optic tip, C-1
interface, C-1
maintenance, C-1
precautions, C-1
Output unleveled, operating error, 2008, 6-14
Oven cold, hardware warning error, 6015, 6-23
Oven RF error, hardware broken error, 7032, 6-30
over sweep, 1-19–20

P

Parm out of range, operating error, 2006, 6-13
Partial USTATE data, operating error, 2040, 6-19
PGA gain sum high, hardware warning error, 6018, 6-24
PGA gain sum low, hardware warning error, 6019, 6-24
PLL error, hardware warning error, 6014, 6-23
PLOT, 1-3, 1-26
power, 1-3–4
power bar, 1-17–18
power meter
annotation, 1-17–18
readout, 1-17–18
zeroing indicator, 1-17–18
Power meter failed, hardware broken error, 7803, 6-34
Power-Meter Function
AUTZERO On Off, 4-20
NOISE ON OFF, 4-105
power meter, 4-112
PWR AVG On Off, 4-121
PWR BAR On Off, 4-122
PWR MTR OptElec, 4-122
USR PWR On Off, 4-174
ZERO, 4-183
Power supply error, hardware broken error, 7033, 6-30
Preselector disabled, operating error, 2047, 6-20
Preselector Function
CENTER DELTA, 4-36
C ◂ DAC SEARCH, 4-41
presel center, 4-114
PRESEL CENTER, 4-114
PRESEL DAC, 4-115
pre-select, 4-115
PRESEL HYS, 4-116
PRESEL On Off, 4-117
PRESEL PARTIAL, 4-117
PRESEL PEAK, 4-118
pressing LCL, 1-2
PRINT, 1-3, 1-26
Problem/ampl low?, diagnostics error, 0024, 6-5
Problem/ampl low?, diagnostics error, 0034, 6-7
Problem/ampl low?, diagnostics error, 0043, 6-8
product support, 5-27
component-level repair, 5-28
component-level support, 5-27
HP service options, 5-27, 5-28
module-level repair, 5-28
module-level support, 5-27
on-site HP service option, 5-28
Programming-Related Function
66 MODE On Off, 4-2
ANY CHR, 4-18
CLEAR TO END, 4-39
COMMAND, 4-42
CONT, 4-46
debug, 4-50
DEBUG FAST, 4-50
DEBUG On Off, 4-51
DEBUG SLOW, 4-52
DELETE CHAR, 4-53
DELETE or . . . , 4-54
EDIT FUNCDEF, 4-58
ENTER COMMAND, 4-59
execute DLP, 4-62
INSERT or . . . , 4-79
PAUSE, 4-108
REPLACE or . . . , 4-134
SELECT CHAR, 4-145
SPACE, 4-151

STEP, 4-156
proper connections
for fiber-optic cables, C-1
Protocol error, operating error, 2009, 6-14

Q

quick reference
active-trace processing functions, 3-2
amplitude-correction functions, 3-5
amplitude functions, 3-4
bandwidth functions, 3-5
calibration functions, 3-6
display functions, 3-7
external-mixer functions, 3-8
frequency functions, 3-9
instrument-state functions, 3-9
lightwave functions, 3-10
limit-line functions, 3-10
marker functions, 3-11
memory-related functions, 3-13
power-meter functions, 3-14
preselector functions, 3-14
programming-related functions, 3-15
service-related functions, 3-16
signal-detection functions, 3-16
signal-identification functions, 3-17
signal-path functions, 3-17
sweep and trigger functions, 3-18
tracking generator functions, 3-19
user-defined functions, 3-21

R

RAM failure, hardware broken error, 7047, 6-32
RBW hardware error, hardware warning error, 6011, 6-23
rear panel, 1-7
reference level, 1-14–15
setting the, 1-12
REFERENCE LEVEL, 1-12
remote operation
running System Diagnostics software, 5-15
running the system diagnostics utilities, 5-20
troubleshooting procedures, 5-13
repair procedures, 5-27
component-level support, 5-27
customer repair, 5-27
HP service options, 5-27, 5-28
module-level repair, 5-28
module-level support, 5-27
system-level repair, 5-28
REPEAT/UNTIL error, operating error, 2022, 6-16
REPORT ERRORS, 1-22, 1-26
Res BW-accuracy, diagnostics error, 0026, 6-5
Res BW-accuracy, diagnostics error, 0036, 6-7
Res BW-amplitude, diagnostics error, 0027, 6-6
Res BW-amplitude, diagnostics error, 0037, 6-7
RES BW AutoMan, 1-13
Res BW -- CF ampl, diagnostics error, 0051, 6-9
Res BW -- CF ampl, diagnostics error, 0052, 6-9
Res BW -- CF ampl, diagnostics error, 0053, 6-10
Res BW -- CF, diagnostics error, 0050, 6-9
resolution bandwidth, 1-14–15
coupling of, 1-13
uncoupled, 1-14–15
using, 1-13
resolution bandwidth and video bandwidth, ratio, 4-176
return, 1-3–4
RF and microwave source
block diagram, A-12
RF attenuator, diagnostics error, 0041, 6-8
RF attenuator, diagnostics error, 0045, 6-9
RF attenuator, diagnostics error, 0060, 6-10
RF INPUT signals
verifying, 1-7–8
RF Preamplifier, diagnostics error, 0070, 6-12
RF Switch 1, diagnostics error, 0064, 6-11
RF Switch 1, diagnostics error, 0068, 6-11
RF Switch 2, diagnostics error, 0065, 6-11
RF Switch 2, diagnostics error, 0069, 6-11
RF Switch 3, diagnostics error, 0066, 6-11
RF Switch 4, diagnostics error, 0067, 6-11
RMT indicator, 1-22
ROM 2 check error, hardware broken error, 7009, 6-26
ROM Check error, hardware broken error, 7000, 6-25

S

Scaling overflow, operating error, 2030, 6-17
Second LO unlocked, hardware broken error, 7003, 6-25
select
hardware detector used for trace data (LOG or V), 4-57
horizontal offset of three-dimensional trace, 4-73

vertical offset of three-dimensional trace, 4-177
self-check, 1-7
`Self test failed`, hardware broken error, 7804, 6-34
SELF TEST indicator, 1-22
`Service mode -- do IP`, operating error, 2027, 6-17
Service-Related Function
66 MODE On Off, 4-2
ANALYZR TEST, 4-17
BLOB On Off, 4-28
CANCEL, 4-33
CONFIRM RESTART, 4-45
DETECTR GND AUT, 4-56
ERASE ALL, 4-61
erase/restart, 4-61
LCL OSC START, 4-82
LCL OSC STOP, 4-83
RESTART, 4-136
ROM VERSION, 4-138
SERVICE REQUEST, 4-146
WARNING On Off, 4-181
Signal-Detection Function
CPL DET On Off, 4-48
detectr, 4-55
DETECTR AutoMan, 4-56
DET SEL LOG V, 4-57
GROUND, 4-72
log/lin detectr, 4-91
NEG PK, 4-101
NORMAL, 4-105
POS PK, 4-111
SAMPLE, 4-139
Signal-Identification Function
IMAGE N START, 4-76
IMAGE N STOP, 4-76
IMAGE SHIFT, 4-78
SIG ID AMPTD Δ, 4-147
SIG ID -> CF, 4-148
SIG ID MAN OFF, 4-148
sig id options, 4-149
SIGNAL IDENT, 4-149
Signal-Path Function
COUPLNG AC DC, 4-47
EXT IF On Off, 4-64
EXT VID FM IQ, 4-65
PATHLOK On Off, 4-107
select adc, 4-144
select input, 4-145
`Single band only`, operating error, 2033, 6-18
softkey menu
amplitude, 2-3
bandwidth, 2-5
frequency, 2-2
instrument-state, 2-7
marker, 2-4
miscellaneous, 2-12
sweep time, 2-5
trace, 2-6
Softkey Menu Map
`Amptd`, 2-3
`BW,Swp`, 2-5
`Freq`, 2-2
`Marker`, 2-4
`Misc`, 2-12
`State`, 2-7
`Traces`, 2-6
softkeys, 1-1, 1-3
color-editing, 1-27
execute function, 1-6
select function, 1-6
space, 1-19–20
span, 1-14–15
SPAN, 1-11
`Span÷trace too large`, operating error, 2038, 6-18
spectrum analyzer
basic block diagram, A-1
individual module block diagrams, A-6–12
theory of operation, A-1
tuning equation, A-1
`Square root error`, computation error, 8005, 6-35
SRQ indicator, 1-22
start frequency, 1-14–15
`State protected`, operating error, 2018, 6-15
status indicators
troubleshooting, 5-2
Status indicators, 1-22
step
down, 1-3–4
keys, 1-4
up, 1-3–4
using the step keys, 1-2
`Step gain amplifier`, diagnostics error, 0025, 6-5
`Step gain amplifier`, diagnostics error, 0035, 6-7
`Step gain amplifier`, diagnostics error, 0046, 6-9
stop frequency, 1-14–15
`storage device`, operating error, 2053, 6-20
subtract
trace math, 4-9

Sweep and Trigger Function
CONT SWEEP, 4-46
EXT, 4-62
HYS LEVEL, 4-75
LINE, 4-86
OVERSWP On Off, 4-106
SINGLE SWEEP, 4-151
SWPTIME AutoMan, 4-162
TRIGGER FREE, 4-171
VIDEO, 4-179
VIDEO LEVEL, 4-179
`Sweep dac`, hardware broken error, 7027, 6-29
sweep time, 1-14–15
coupling of, 1-13
uncoupled, 1-14–15
sweep time softkey menu, 2-5
system
diagnostics, error messages, 6-2
system diagnostics
testing a lightwave signal analyzer, 5-7
System Diagnostics, 5-7–21
calibrator signal, 5-16
computer requirements, 5-16
DOWN_DIAG utility, 5-20
factory installation of program, 5-7
HP-MSIB addressing order requirements, 5-16
individual system diagnostics utilities, 5-20
loading system diagnostics program into RAM, 5-20, 5-21
locating system diagnostic error messages, 5-21
locating system diagnostics utility software, 5-20
LO firmware compatibility, 5-14
making backup copies of software, 5-16
memory overflow error message, 5-21
recovering from problems while running System Diagnostics, 5-21
REM_DIAG utility, 5-20
RSTR_STATE utility, 5-20
running Analyzer Test routine, 5-14
running System Diagnostics from the front panel, 5-14
running System Diagnostics remotely, 5-15
running System Diagnostics software, 5-14
running the system diagnostics utilities, 5-20
SAVE_STATE utility, 5-20
troubleshooting procedures, 5-14
system diagnostics software, 5-7
`System error (slave)`, operating error, 2025, 6-16

T

`Test switch on`, operating error, 2034, 6-18
theory of operation
lightwave signal analyzer, A-2
spectrum analyzer, A-1
three-dimensional
horizontal position control, 4-73
trace, 4-1
vertical trace control, 4-177
title line, 1-19–20
TLK indicator, 1-22
`Too many entries`, operating error, 2015, 6-15
`Too many errors`, operating error, 2031, 6-17
to recall a file, 4-127
trace
horizontal three-dimensions, 4-73
three-dimensional, 4-1
vertical three-dimensions, 4-177
trace annotation, 1-17–18
trace data
select hardware detector used for, 4-57
trace math
A*DL/(A+B+C)▸A, 4-7
A*DL/(A+B)▸A, 4-7
A*DL/B▸A, 4-8
A*DL/C▸A, 4-8
A–B+DL▸A, 4-9
(A–B)–C+DL▸A, 4-10
(A–B)–C▸A, 4-10
A–B▸A, 4-9
(A–C)+DL▸A, 4-11
A–C▸A, 4-11
DL*(A+B)/C▸A, 4-12
trace softkey menu, 2-6
Tracking Generator Function
A-C ->A On Off, 4-4
ALC ALT, 4-5
ALC EXT, 4-5
ALC NRM, 4-6
alc/track, 4-6
AM FREQ, 4-13
AM INT EXT, 4-13
AM % On Off, 4-14
AVERAGE SHRT->C, 4-21
BLANKNG On Off, 4-27
modultn, 4-101
power, 4-111
PWR STP AutoMan, 4-123
PWR SWP On Off, 4-123
SRC ATN AutoMan, 4-152
SRC OSC INT EXT, 4-153
SRC PWR OFFSET, 4-154
SRC PWR On Off, 4-154

STM RSP MIL Cpl, 4-157
STM RSP On Off, 4-157
STORE OPEN ->C, 4-159
STORE THRU->B, 4-160
trace norm, 4-166
track gen, 4-167
TRACKNG ADJUST, 4-168
TRACKNG PEAK, 4-169
trigger delay, control for selected ADC, 4-170
troubleshooting
active indicators, 5-3
analyzer test, 5-5
background tests, 5-6
built-in tools, 5-1
display-disruptive errors, 5-5
display tests, 5-5
element status indicators, 5-2
error indicators, 5-2
error message reporting, 5-3
HP-MSIB communication, 5-4
HP-MSIB Troubleshooting Utility, 5-7
locating error message block, 5-3
mainframe status indicators, 5-3
Operation Verification, 5-7
servicing a lightwave signal analyzer, 5-9
software programs, 5-1
status indicators, 5-2
System Diagnostics, 5-7
testing a lightwave signal analyzer, 5-10
troubleshooting procedures, 5-9
abnormal screen display, 5-25
catastrophic failures, 5-22
categorizing failures, 5-9, 5-11
current error indicator LED, 5-24
HP-MSIB, 5-25
HP-MSIB troubleshooting utility, 5-25
I/O check error indicator LED, 5-24
I/O or HP-MSIB indicator is on, 5-22
lightwave signal analyzer, 5-10
module removal method, 5-25, 5-26
program for reading from LO memory, 5-18
program for writing to LO memory, 5-18
recording error messages, 5-13
recovering from problems while running System Diagnostics, 5-21
reporting error messages remotely, 5-13
running System Diagnostics software, 5-14
saving the contents of RAM, 5-17
System Diagnostics, 5-14
testing a lightwave signal analyzer, 5-12, 5-13
testing analyzer remotely, 5-13
troubleshooting a lightwave signal analyzer, 5-9
troubleshooting a spectrum analyzer, 5-9
troubleshooting from the front panel, 5-9, 5-12
troubleshooting over HP-IB, 5-9, 5-13
using Analyzer Test, 5-12
using selected Operation Verification softkeys, 5-13
using System Diagnostics, 5-12
using the display confidence test, 5-12
Volt/Temp error indicator LED, 5-23
`Tune DAC`, hardware broken error, 7024, 6-29
`Tune+Span`, diagnostics error, 0040, 6-8
`Tune+Span disconnect`, hardware broken error, 7073, 6-33
`Tune/Span error`, hardware broken error, 7078, 6-33
tuning equation, A-1
spectrum analyzer, A-1
turn on/off
three-dimensional trace display, 4-1

U

UNCAL, 1-13
uncalibrated, 1-14–15
UNCOR, 1-9
uncorrected, 1-14–15
underscore, 1-14–15
USER, 1-23
User-Defined Function
catalog && MSI, 4-34
DEFINE USR KEY, 4-52
DISPOSE USER, 4-57
EDIT FUNCDEF, 4-58
execute DLP, 4-62
key control, 4-80
PRESET USER, 4-120
RECALL USER, 4-129
SAVE USER, 4-143
user-defined functions, 1-28
incorporating, 1-25
`Userdef protected`, operating error, 2048, 6-20
user errors 0001 – 0999, 6-2
user functions, 1-3
USER key, 1-2, 1-3–4, 1-23
USERLOCK OFF, 1-25
USERLOCK ON, 1-25
user power indicator, 1-17–18
user softkeys
defining custom, 1-23
erasing custom, 1-23
presetting, 1-23
restricting instrument operation to, 1-25
viewing factory-preset, 1-23

`User stack overflow`, operating error, 2039, 6-18

V

VID AVG On Off, 1-13
VID BW AutoMan, 1-13
video
  bandwidth coupling, affected, 4-176
video average counter, 1-14, 1-15
video averaging, 1-13
video bandwidth, 1-14, 1-15
  coupling of, 1-13
  uncoupled, 1-14, 1-15
  using, 1-13
`Video output cable`, diagnostics error, 0021, 6-5
`Video output cable`, diagnostics error, 0031, 6-6
`Video proc: 0 volt`, hardware broken error, 7029, 6-30
`Video proc: 2 volt`, hardware broken error, 7030, 6-30
`volume full`, operating error, 2057, 6-21

W

warning
  "Possible compression" (warning # 16007), 4-161
`write protect`, operating error, 2054, 6-20

Y

`YTF drive error`, hardware broken error, 7077, 6-33
YTO, 1-22
`YTO is unlocked`, hardware broken error, 7016, 6-27
`YTO tuning range`, hardware broken error, 7044, 6-32
`YTO tuning range`, hardware warning error, 6006, 6-22
`YTO unleveled`, hardware broken error, 7015, 6-27

Z

`Zeroing error`, hardware broken error, 7805, 6-34