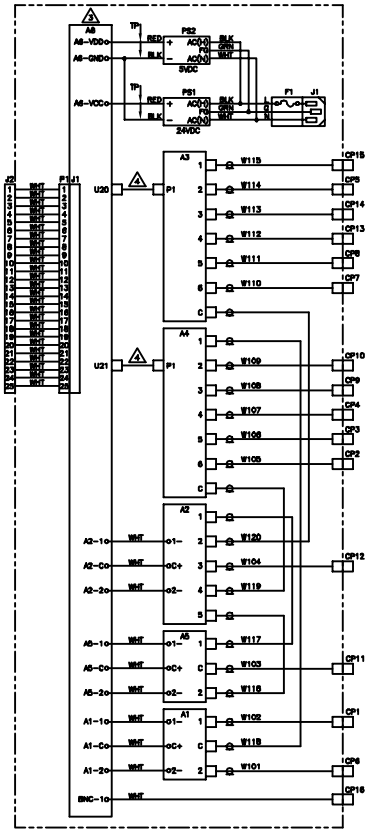

WIRING DIAGRAM

	AR	50			SOLDER	QQ-S-571	SN63
	AR	49			SLEEVING, HEAT SHRINK	MIL-I-23053/5	
	AR	48		06383	ABMM-A-C	SMALL	PANDUIT
	AR	47		56501	TY523M	SMALL	THOMAS & BETTS
	AR	46		56501	18RA-6F	NO 6	THOMAS & BETTS
	AR	45			WIRE, 20AWG, RED	MIL-W-16878/4	
	AR	44			WIRE, 20AWG, BLK	MIL-W-16878/4	
	AR	43			WIRE, 20AWG, GRN	MIL-W-16878/4	
	AR	42			WIRE, 20AWG, WHT	MIL-W-16878/4	
		41					
	3	40	W116 W120 W119	08RE7	P-K7272-14	CABLE ASSY, 3.5mm	14 INCHES	SERTEK INC
	15	39	W101 W102 W103	08RE7	P-K7272-06	CABLE ASSY, 3.5mm	6 INCHES	SERTEK INC
	2	38	W104 W117	08RE7	P-K7272-05	CABLE ASSY, 3.5mm	5 INCHES	SERTEK INC
	2	37		71468	D-20418-2	SCREW LOCK ASSEMBLY	.112-40UNC-2A	ITT/CANNON
3	1	36	A6	30181	970115	RF MATRIX PWB ASSY		GROUP J INC
	2	35	A71,A72	74868	2001-6110-00	TERMINATOR	50 OHM	AMPHENOL
	15	34	P1-CP15	74970	141-0801-401	RCPT, SMA BULKHEAD		AMPHENOL
	1	33	CP16	74868	J1-2221	RCPT, BNC BULKHEAD		AMPHENOL
	2	32	A3,A4	20898	HP5781K/OPT 008	SWITCH, COAXIAL	W/RIBBON CABLE	HEWLETT PACKARD
	1	31	A2	20898	HP5764C	SWITCH, COAXIAL		HEWLETT PACKARD
	2	30	A1,A5	20898	HP5762C	SWITCH, COAXIAL		HEWLETT PACKARD
	1	29	P1	71468	DBM25S	CONNECTOR		ITT/CANNON
	1	28	J2	71468	DBM25P	CONNECTOR		ITT/CANNON
	1	27	PS2	80103	L33-34-5	POWER SUPPLY	5VDC	LAMBDA
	1	26	PS1	80103	L33-J5-24	POWER SUPPLY	24VDC	LAMBDA
	1	25	F1	71400	AGC 1	FUSE		BUSSMAN
	1	24	J1	05345	6J4	RECEPTACLE, FUSED		CORCOM
	6	23		91833	4816	STANDOFF, MALE/FEMALE	1/4-20UNC-2A X .500LG	KEYSTONE
		22						
	4	21			COML	WASHER, FLAT	NO 10	CRES
	4	20			COML	WASHER, LOCK	NO 10	CRES
	6	19			COML	WASHER, FLAT	NO 6	CRES
	6	18			COML	WASHER, LOCK	NO 6	CRES
	14	17			COML	WASHER, LOCK	NO 4	CRES
		16						
		15						
	4	14			COML	SCREW, FLT HD, SOCKET	M3 X 0.5 X 8	CRES
	4	13			COML	SCREW, PAN HD, X-REC	1/4-20UNC-2A X .500LG	CRES
	6	12			COML	SCREW, PAN HD, X-REC	1/4-20UNC-2A X .250LG	CRES
	4	11			COML	SCREW, SKT HD, HEX	1/4-20UNC-2A X .250LG	CRES
	2	10			COML	SCREW, SKT HD, HEX	1/4-20UNC-2A X .500LG	CRES
	8	9			COML	SCREW, SKT HD, HEX	1/4-20UNC-2A X .750LG	CRES
		8						
		7						
	1	6			9612218-3	BRACKET		
	1	5			9612218-2	BRACKET		
	2	4			9612218-1	BRACKET		
	1	3			9612219-1	PANEL		
	1	2			9612220-1	ENCLOSURE		
	1	1			9454445-1	LABEL, DSN		
	QTY	ITEM NO	CODE NO					

PARTS LIST

1. FABRICATE AND INSPECT TO CONFORM TO WORKMANSHIP REQUIREMENTS OF JPL SPEC GAC-50180-GEN.

NOTES: UNLESS OTHERWISE SPECIFIED.

JET PROPULSION LABORATORY

351 DSN

RF MATRIX SWITCH ASSEMBLY

E	23835	9612221	A
	1/1	UNCLASSIFIED	

SS\GJ\SUSAN\SEY\9612221 1

9612221

9612221 1 = 3